DRAKE

SERVICE MANUAL



R-4C / T-4XC

R. L. DRAKE COMPANY. MIAMISBURG, OHIO. U.S.A.

ID	Photo Page	Value	Unit	W	Tol.	Type
R1	R10	2.2M	Ohm	0.5	10%	CC
R2	R10	18k	Ohm	0.5	10%	CC
R3	R10	15k	Ohm	0.5	10%	CC
R4	R10	68k	Ohm	0.5	10%	CC
R5	R10	1.5k	Ohm	0.5	10%	CC
R6	R10	4.7k	Ohm	0.5	10%	CC
R7	R10	1.5k	Ohm	0.5	10%	CC
R8A	R10	100k	Ohm	0.5	10%	CC
R8B	R5	1k	Ohm	0.5	10%	CC
R9	R5	270	Ohm	0.5	10%	CC
R10	R10	12M	Ohm	0.25	10%	CC
R11	R10	6.8M	Ohm	0.25	10%	CC
R12	R5	22k	Ohm	0.5	10%	CC
R13	R5	1.5k	Ohm	0.5	10%	CC
R14	R5	220	Ohm	0.5	10%	CC
R15	R9	82k	Ohm	0.5	10%	CC
R16	R5	1M	Ohm	0.25	10%	CC
R17	R5	470k	Ohm	0.25	10%	CC
R18	R5	4.7k	Ohm	0.25	10%	CC
R19	R4	1.5k	Ohm	0.25	10%	CC
R20	R4	33k	Ohm	0.25	10%	CC
R21	R9 & R5	33k	Ohm	0.25	10%	CC
R22	R9	470	Ohm	0.5	10%	CC
R23	R7	150	Ohm	0.25	10%	CC
R24	R7	100	Ohm	0.25	10%	CC
R25	R7	470	Ohm	0.25	10%	CC
R26	R7	2.2M	Ohm	0.25	10%	CC
R27	R7	3.3M	Ohm	0.25	10%	CC
R28	R7	1.5k	Ohm	0.25	10%	CC
R29	R7	680	Ohm	0.25	10%	CC
R30	R7	1M	Ohm	0.25	10%	CC
R31	R7	680k	Ohm	0.25	10%	CC
R32	[Rear Panel]	1k	Ohm	0.25	10%	Zero
R33	R4	2k	Ohm	0.25	10%	Trim
R34	R4	560	Ohm	0.25	10%	CC
R35	NF		Ohm	0.25	10%	CC
R36	R4	2k	Ohm	0.25	10%	Trim
R37	[S-2C (Top)]	68	Ohm	0.25	10%	CC
R38	R4	18k	Ohm	0.25	10%	CC
R39	R4	20k	Ohm	0.25	10%	Trim
R40	R4	6.8M	Ohm	0.25	10%	CC
R41	R5	33k	Ohm	0.25	10%	CC
R42	R10	12k	Ohm	0.25	10%	CC
R43	R4	4.7k	Ohm	0.25	10%	CC
R44	NF		Ohm	0.25	10%	CC
R45	R5	100	Ohm	0.25	10%	CC
R46	R5	33k	Ohm	0.25	10%	CC
R47	R5	33k	Ohm	0.25	10%	CC
R48	R5	22k	Ohm	0.25	10%	CC
R49	R5	22k	Ohm	0.25	10%	CC
R50	R5	4.7M	Ohm	0.25	10%	CC

 Copyright 2004 - K4OAH

ID	Photo Page	Value	Unit	W	Tol.	Type
R51	R5	33k	Ohm	0.25	10%	CC
R52	R5	220k	Ohm	0.25	10%	CC
R53	NF		Ohm	0.25	10%	CC
R54	R10	10k	Ohm	0.25	10%	RF Gain
R55	R5	1k	Ohm	0.25	10%	Trim
R56	R5	150	Ohm	0.25	10%	CC
R57	NF		Ohm	0.25	10%	CC
R58	R4	100k	Ohm	0.25	10%	CC
R59	R4	150	Ohm	0.25	10%	CC
R60	R4	1k	Ohm	0.25	10%	CC
R61	R4	1k	Ohm	0.25	10%	CC
R62	R4	68k	Ohm	0.25	10%	CC
R63	R4	330	Ohm	0.25	10%	CC
R64	R4	22k	Ohm	0.25	10%	CC
R65	R4	2.2M	Ohm	0.25	10%	CC
R66	R4	330	Ohm	0.25	10%	CC
R67	R4	1.5k	Ohm	0.25	10%	CC
R68	R3	100	Ohm	0.25	10%	CC
R69	R4	470	Ohm	0.25	10%	CC
R70A	R10	1.5k	Ohm	0.25	10%	CC
R70B	R5	1M	Ohm	0.25	10%	CC
R71	NF	22k	Ohm	0.25	10%	CC
R72	R10	3k	Ohm	0.25	10%	AF Gain
R73	R5	100k	Ohm	0.25	10%	CC
R74	R5	1M	Ohm	0.25	10%	CC
R75	R3	150	Ohm	0.25	10%	CC
R76	R3	3.3k	Ohm	0.25	10%	CC
R77	R3	82	Ohm	0.25	10%	CC
R78	R3	1k	Ohm	0.25	10%	CC
R79	R3	1k	Ohm	0.25	10%	CC
R80	R3	56k	Ohm	0.25	10%	CC
R81	R3	4.7k	Ohm	0.25	10%	CC
R82	R3	82k	Ohm	0.25	10%	CC
R83	R3	22k	Ohm	0.25	10%	CC
R84	R3	100	Ohm	0.25	10%	CC
R85	R3	470	Ohm	0.25	10%	CC
R86	R3	0.82	Ohm	1	10%	WW
R87	R3	3.3M	Ohm	0.25	10%	CC
R88	R10	1k	Ohm	0.25	10%	CC
R89	R10	1.5k	Ohm	0.25	10%	CC
R90	R6	15	Ohm	0.25	10%	CC
R91	R6	680	Ohm	0.25	10%	CC
R92	R6	100	Ohm	0.25	10%	CC
R93	R6	6.8k	Ohm	0.25	10%	CC
R94	R6	330	Ohm	0.25	10%	CC
R95	R6	4.7k	Ohm	0.25	10%	CC
R96	R6	680	Ohm	0.25	10%	CC
R97	R10	1.5k	Ohm	0.25	10%	CC
R98	R10	220k	Ohm	0.25	10%	CC
R99	R10	680k	Ohm	0.25	10%	CC
R100	R10	470	Ohm	0.25	10%	CC

 Copyright 2004 - K4OAH

ID	Photo Page	Value	Unit	W	Tol.	Type
R101	R10	68k	Ohm	0.25	10%	CC
R102	R10	150	Ohm	0.25	10%	CC
R103	R10	150	Ohm	0.25	10%	CC
R104	[PTO]	100	Ohm	0.25	10%	CC
R105	[PTO]	100	Ohm	0.25	10%	CC
R106	[PTO]	22k	Ohm	0.25	10%	CC
R107	[PTO]	6.8k	Ohm	0.25	10%	CC
R108	[PTO]	330	Ohm	0.25	10%	CC
R109	[PTO]	560	Ohm	0.25	10%	CC
R110	[PTO]	330	Ohm	0.25	10%	CC
R111	[PTO]	1M	Ohm	0.25	10%	CC
R112	R2	4.7k	Ohm	0.5	10%	CC
R113	R2	47k	Ohm	0.5	10%	CC
R114	R2	150	Ohm	2	10%	CC
R115	R2	6.8k	Ohm	5	10%	WW
R116	R2	5.6k	Ohm	5	10%	WW
R117	R2	47	Ohm	0.5	10%	CC
R118	NF		Ohm	0.5	10%	CC
R119	NF		Ohm	0.5	10%	CC
R120	NF		Ohm	0.5	10%	CC
R121	R8	470	Ohm	0.25	10%	CC
R122	R8	470	Ohm	0.25	10%	CC
R123	R8	270	Ohm	0.5	10%	CC
R124	R8	330	Ohm	0.25	10%	CC
R125	R8	1M	Ohm	0.25	10%	CC
R126	R8	1k	Ohm	0.25	10%	CC
R127	R8	100	Ohm	0.25	10%	CC
R128	R8	2.2k	Ohm	0.25	10%	CC
R129	R8	2.2k	Ohm	0.25	10%	CC
R130	R8	1k	Ohm	0.25	10%	CC
R131	R5	33k	Ohm	0.5	10%	CC
R132	R9	1M	Ohm	0.5	10%	CC
R133	R9	2.2k	Ohm	0.5	10%	CC
R134	[S-2D (Top)]	82	Ohm	0.5	10%	CC
R135	[S-2D (Top)]	100	Ohm	0.5	10%	CC
R136	R9	1.5k	Ohm	0.5	10%	CC

 Copyright 2004 - K4OAH

ID	Photo Page	Value	Unit	V	Tol.	Type
C1	R11	30	pF	500	2%	Dipped SM
C2	R10 [ANT TRIM]	1-10	pF			Cer Trim
C3	R10 [ANT TRIM]	25	pF	1k	5%	NPO Cer
C4	R10 [ANT TRIM]	2-25	pF			Cer Trim
C5	R10 [ANT TRIM]	75	pF	1k	5%	NPO Cer
C6	R10 [ANT TRIM]	4-40	pF			Cer Trim
C7	R10 [ANT TRIM]	210	pF	500	5%	Dipped SM
C8	R10 [ANT TRIM]	7-100	pF			Cer Trim
C9	R10 [ANT TRIM]	540	pF	500	5%	Dipped SM
C10	R10 [ANT TRIM]	7-100	pF			Cer Trim
C11	R10 [ANT TRIM]	2400	pF	500	5%	Dipped SM
C12	R10 [ANT TRIM]	37-250	pF			Cer Trim
C13	R11	0.001	uF		20%	Z5U Cer
C14	R11	0.001	uF		20%	Z5U Cer
C15	R11	10	pF			NPO Cer
C16	R11	0.01	uF		20%	Z5U Cer
C17	R11	470	pF			NPO Cer
C18	R10 [RF TRIM]	1-10	pF			Cer Trim
C19	R10 [RF TRIM]	25	pF			NPO Cer
C20	R10 [RF TRIM]	2-25	pF			Cer Trim
C21	R10 [RF TRIM]	75	pF			NPO Cer
C22	R10 [RF TRIM]	4-40	pF			Cer Trim
C23	R10 [RF TRIM]	210	pF	500	5%	Dipped SM
C24	R10 [RF TRIM]	7-100	pF			Cer Trim
C25	R10 [RF TRIM]	540	pF	500	5%	Dipped SM
C26	R10 [RF TRIM]	7-100	pF			Cer Trim
C27	R10 [RF TRIM]	2400	pF	500	5%	Dipped SM
C28	R10 [RF TRIM]	37-250	pF			Cer Trim
C29	R11	39	pF			NPO Cer
C30	R11	39	pF			NPO Cer
C31	R11	10	pF			NPO Cer
C32	R11	27	pF			NPO Cer
C33	R11	0.005	uF		20%	Z5U Cer
C34	R11	0.005	uF		20%	Z5U Cer
C35	R5	10	uF			Tubular Elec
C36	R5	0.001	uF		20%	Z5U Cer
C37	NF					
C38	R11	0.005	uF		20%	Z5U Cer
C39	R11	0.01	uF		20%	Z5U Cer
C40	R5	0.005	uF		20%	Z5U Cer
C41	R11	0.005	uF		20%	Z5U Cer
C42	R5	7-60	pF			Cer Trim
C43	R5	0.01	uF		20%	Z5U Cer
C44	R5	0.005	uF		20%	Z5U Cer
C45	R9	39	pF		5%	NPO Cer
C46	R4	0.1	uF	200	20%	Mylar
C47	R2	1	uF			Dipped Elec
C48	R5	39	pF		5%	NPO Cer
C49	R4	430	pF	500		Dipped SM
C50	[S-2A (Top)]	0.05	uF	100		Z5V Cer
C51	R9	0.01	uF		20%	Z5U Cer

 Copyright 2004 - K4OAH

ID	Photo Page	Value	Unit	V	Tol.	Type
C52	R9	18	pF		5%	NPO Cer
C53	R7	0.001	uF		20%	Z5U Cer
C54	R7	0.01	uF		20%	Z5U Cer
C55	R7	0.005	uF		20%	Z5U Cer
C56	R7	20	pF		5%	NPO Cer
C57	R7	0.01	uF		20%	Z5U Cer
C58	R7	0.001	uF		20%	Z5U Cer
C59	R7	7-60	pF			Cer Trim
C60	R7	7-60	pF			Cer Trim
C61	NF					
C62	R4	3000	pF	500	5%	Dipped SM
C63	R4	3000	pF	500	5%	Dipped SM
C64	R4	68	pF	500	5%	Dipped SM
C65	R4	490	pF	500	5%	Dipped SM
C66	R4	0.01	uF		20%	Z5U Cer
C67	R4	0.01	uF		20%	Z5U Cer
C68	R5	220	pF		20%	Z5U Cer
C69	R5	68	pF		5%	NPO Cer
C70	R5	0.001	uF		20%	Z5U Cer
C71	R5	0.001	uF		20%	Z5U Cer
C72	R5	0.01	uF		20%	Z5U Cer
C73	R5	0.22	uF	80	10%	Mylar
C74	R5	0.047	uF	50	5%	Mylar
C75	R5	0.001	uF		20%	Z5U Cer
C76	R5	0.001	uF		20%	Z5U Cer
C77	R5	0.05	uF	100	20%	Z5V Cer
C78	R11	0.001	uF		20%	Z5U Cer
C79	R9	0.01	uF		20%	Z5U Cer
C80	R4	10	pF		5%	NPO Cer
C81	R4	0.05	uF	16	+80-20%	Z5U Cer
C82	R4	0.1	uF	12	20%	Z5U Cer
C83	R4	0.01	uF		20%	Z5U Cer
C84	R4	0.01	uF		20%	Z5U Cer
C85	R4	10	uF			Dipped Elec
C86	R9	20-400	pF			Air Variable
C87	R4	1300	pF	500	2%	Dipped SM
C88	R4	200	pF	500	5%	Dipped SM
C89	R4	0.22	uF			Dipped Elec
C90	R4	0.47	uF	80	10%	Mylar
C91	R4	0.015	uF		20%	Z5U Cer
C92	R4	0.005	uF		20%	Z5U Cer
C93	R4	0.1	uF	12	20%	Z5U Cer
C94	R4	0.01	uF		20%	Z5U Cer
C95	R9	0.001	uF	1400		AC Bypass
C96	NF					
C97	NF					
C98	R9	0.001	uF	1400		AC Bypass
C99	R3	0.001	uF		20%	Z5U Cer
C100	R3	0.22	uF			Dipped Elec
C101	R3	0.005	uF		20%	Z5U Cer
C102	R3	0.01	uF		20%	Z5U Cer

 Copyright 2004 - K4OAH

ID	Photo Page	Value	Unit	V	Tol.	Type
C103	R11	0.01	uF		20%	Z5U Cer
C104	R3	0.01	uF		20%	Z5U Cer
C105	R11	0.005	uF		20%	Z5U Cer
C106	R11	8.2	pF		5%	NPO Cer
C107	R11	6.8	pF		5%	NPO Cer
C108	R11	33	pF		5%	NPO Cer
C109	R11	68	pF		5%	NPO Cer
C110	R11	100	pF	500	5%	Dipped SM
C111	R6	0.001	uF		20%	Z5U Cer
C112	R6	0.01	uF		20%	Z5U Cer
C113	R6	0.01	uF		20%	Z5U Cer
C114	R6	0.001	uF		20%	Z5U Cer
C115	R6	0.01	uF		20%	Z5U Cer
C116	R6	35	pF		5%	NPO Cer
C117	R11	0.001	uF		20%	Z5U Cer
C118	R3	390	pF	500	5%	Dipped SM
C119	R3	680	pF	500	5%	Dipped SM
C120	R11	0.01	uF		20%	Z5U Cer
C121	R10 [INJ TRIM]	1-10	pF			Cer Trim
C122	R11	0.47	pF			Ceramic
C123	R10 [INJ TRIM]	1-10	pF			Cer Trim
C124	R10 [INJ TRIM]	10	pF		5%	NPO Cer
C125	R11	1	pF			Ceramic
C126	R10 [INJ TRIM]	1-10	pF			Cer Trim
C127	R10 [INJ TRIM]	20	pF		5%	NPO Cer
C128	R10 [INJ TRIM]	39	pF		5%	NPO Cer
C129	R10 [INJ TRIM]	2-25	pF			Cer Trim
C130	R11	2	pF			Ceramic
C131	R10 [INJ TRIM]	68	pF		5%	NPO Cer
C132	R10 [INJ TRIM]	2-25	pF			Cer Trim
C133	R11	2	pF			Ceramic
C134	R10 [INJ TRIM]	68	pF		5%	NPO Cer
C135	R10 [INJ TRIM]	2-25	pF			Cer Trim
C136	R11	1.5	pF			Ceramic
C137	R11	0.82	pF			Ceramic
C138	R10 [PREMIX TRIM]	1-10	pF			Cer Trim
C139	R10 [PREMIX TRIM]	1-10	pF			Cer Trim
C140	R10 [PREMIX TRIM]	1-10	pF			Cer Trim
C141	R10 [PREMIX TRIM]	15	pF		5%	NPO Cer
C142	R10 [PREMIX TRIM]	35	pF		5%	NPO Cer
C143	R10 [PREMIX TRIM]	2-25	pF			Cer Trim
C144	R10 [PREMIX TRIM]	62	pF		5%	NPO Cer
C145	R10 [PREMIX TRIM]	2-25	pF			Cer Trim
C146	R10 [PREMIX TRIM]	62	pF		5%	NPO Cer
C147	R10 [PREMIX TRIM]	2-25	pF			Cer Trim
C148	[PTO]	0.005	uF		20%	Z5U Cer
C149	[PTO]	0.01	uF		20%	Z5U Cer
C150	[PTO]	0.01	uF		20%	Z5U Cer
C151	[PTO]	10	uF			Dipped Elec
C152	[PTO]	390	pF	500	5%	Dipped SM
C153	[PTO]	80	pF		5%	NPO Cer

 Copyright 2004 - K4OAH

ID	Photo Page	Value	Unit	V	Tol.	Type
C154	[PTO]	0.01	uF		20%	Z5U Cer
C155	[PTO]	Selected				
C156	[PTO]	0.01	uF		20%	Z5U Cer
C157	[PTO]	45	pF		5%	NPO Cer
C158	[PTO]	Selected				
C159	[PTO]	Selected				
C160	[PTO]	12	pF		5%	NPO Cer
C161	[PTO]	10	pF		5%	NPO Cer
C162	R2	8	uF	150		Tubular Elec
C163	R9	100	uF	200		Twist-Lok
C164	R9	200	uF	200		Twist-Lok
C165	R3	10	uF			Dipped Elec
C166	R9	3000	uF			Twist-Lok
C167	R9	1000	uF			Twist-Lok
C168	R2	10	uF	12		Axial Elec
C169	R11	0.01	uF		20%	Z5U Cer
C170	R7	39	pF		5%	NPO Cer
C171	R7	20	pF		5%	NPO Cer
C172	R11	470	pF		20%	Z5U Cer
C173	R11	1	uF			Dipped Elec
C174	R8		pF			Cer Trim
C175	R3	10	uF	25		Tubular Elec
C176	R8	0.1	uF	12	20%	Z5U Cer
C177	R8	0.1	uF	12	20%	Z5U Cer
C178	R8	0.001	uF		20%	Z5U Cer
C179	R8	250	uF	15		Tubular Elec
C180	R8	10	uF			Dipped Elec
C181	R8	0.01	uF		20%	Z5U Cer
C182	R8	1000	pF	500	2%	Dipped SM
C183	R8	0.01	uF		-80%	Z5U Cer
C184	R11	0.005	uF		20%	Z5U Cer
C185	NF	0.001	uF		20%	Z5U Cer
C186	R11	0.01	uF	25	20%	Z5U Cer
C187	R11	0.005	uF		20%	Z5U Cer
C188	R9	0.05	uF		20%	Z5U Cer
C189	R9	0.01	uF	25	20%	Z5U Cer
C190	R4	0.01	uF		20%	Z5U Cer
C191	R5	27	pF		5%	NPO Cer
C192	R2	0.05	uF	115VAC		Z5U Cer
C193	R2	0.005	uF		20%	Z5U Cer
C194	R11	0.01	uF		20%	Z5U Cer
C195	R5	0.05	uF	100		Z5V Cer
C196	R4	68	pF	500	5%	Dipped SM
C197	R11	25	pF		5%	NPO Cer
C198	R11	0.005	uF		20%	Z5U Cer
C199	R9	25	pF		5%	NPO Cer
C200	R9	0.1	uF	12	20%	Z5U Cer
C201	R9	20	uF	150		Electrolytic
C202	R9	20	uF	200		Twist-Lok
C203	[PTO]	45	pF		5%	NPO Cer
C204	R3	0.01	uF		20%	Z5U Cer

 Copyright 2004 - K4OAH

ID	Photo Page	Device	V	W	Tol	Type
CR1	R5	1N4148				Si Switch
CR2	R4	1N270	80			Ge Signal
CR3	R4	1N270	80			Ge Signal
CR4	R4	1N270	80			Ge Signal
CR5	R10	1N270	80			Ge Signal
CR6	[PTO]	1N714	10	0.25		Zener
CR7	R2	B5G5	1k			Si Rectifier
CR8	R2	B5G5	1k			Si Rectifier
CR9	R2	B5G5	1k			Si Rectifier
CR10	R2	B5G5	1k			Si Rectifier
CR11	R2	B5G5	1k			Si Rectifier
CR12	R5	1N4148				Si Switch
CR13	R5	1N4148				Si Switch
CR14	R2	1N5240A	10	0.5	5%	Zener
CR15	R10	1N4148				Si Switch
CR16	R8	1N270	80			Ge Signal
CR17	R8	1N714	10	0.25		Zener
CR18	R2	B5G5	1k			Si Rectifier
CR19	R2	B5G5	1k			Si Rectifier
CR20	R4	1N270	80			Ge Signal
CR21	R4	1N270	80			Ge Signal
CR22	R5	1N4148				Si Switch

ID	Photo Page	Device				Type
Q1	R5	2N5950				N-JFET RF
Q2	R2	EP-487				NPN Si GP Pwr
Q3	R7	2N5950				N-JFET RF
Q4	R7	2N5953				N-JFET RF
Q5	R4	2N3394				NPN Si GP
Q6	R4	2N3394				NPN Si GP
Q7	R5	2N3877				NPN Si GP
Q8	[PTO]	2N5950				N-JFET RF
Q9	R3	2N3394				NPN Si GP
Q10	R3	2N3394				NPN Si GP
Q11	R3	40310				NPN Si AF Pwr
Q12	R6	2N3392				NPN Si GP
Q13	[PTO]	2N3563				NPN Si VHF/UHF
Q14	R8	2N5950				N-JFET RF
Q15	R8	2N3394				NPN Si GP

 Copyright 2004 - K4OAH

ID	Photo Page	Device				
L1	R10					
L2	R10					
L3	R3					
L4	[PTO]					
L5	NF					
L6	NF					
L7	R10					
L8	R10					
T1						
T2						
T3						
T4						
T5						
T6						
T7						
T8						
T9	R5					
T10						
T11						
T12	[PTO]					
T13	R9					
T14						
T15						
T16	R5					
U1	R8	SN7473				

 Copyright 2004 - K4OAH

ID	Photo Page	Value	Unit	W	Tol	Type
R1	R12	330	Ohm	0.5	10%	CC
R2	R12	33k	Ohm	0.5	10%	CC
R3	R12	8.2k	Ohm	0.5	10%	CC
R4	R12	1k	Ohm	0.5	10%	CC
R5	R12	100	Ohm	0.5	10%	CC
R6	R12	4.7k	Ohm	0.5	10%	CC
R7	R12	39k	Ohm	0.5	10%	CC
R8	R12	10k	Ohm	0.5	10%	CC
R9	R12	100	Ohm	0.5	10%	CC
R10	R12	1k	Ohm	0.5	10%	CC
R11	R12	470	Ohm	0.5	10%	CC
R12	R12	1k	Ohm			Trim
R13	R12	4.7	Ohm	0.5	10%	CC
R14	R12	4.7	Ohm	0.5	10%	CC
R15	R12	1k	Ohm	0.5	10%	CC
R16	R12	10k	Ohm	0.5	10%	CC
R17	R12	100	Ohm	0.5	10%	CC
R18	R12	100k	Ohm	0.5	10%	CC
R19	R12	10k	Ohm	0.5	10%	CC
R20	R12	10k	Ohm	0.5	10%	CC
R21	R12	100	Ohm	0.5	10%	CC
R22	R12	22k	Ohm	0.5	10%	CC
R23	R12	10k	Ohm	0.5	10%	CC
R24	R12	33	Ohm	0.5	10%	CC
R25	R12	10k	Ohm	0.5	10%	CC
R26	R12	100	Ohm	0.5	10%	CC
R27	R12	10k	Ohm	0.5	10%	CC
R28	R12	5k	Ohm			Trim
R29	R12	10k	Ohm	0.5	10%	CC
R30	R12	22k	Ohm	0.5	10%	CC
R31	R12	100	Ohm	0.5	10%	CC
R32	R12	1k	Ohm	0.5	10%	CC
R33	R12	1k	Ohm	0.5	10%	CC
R34	R12	10k	Ohm	0.5	10%	CC
R35	R12	22k	Ohm	0.5	10%	CC
R36	R12	10k	Ohm	0.5	10%	CC
R37	R12	100	Ohm	0.5	10%	CC
R38	R12	1k	Ohm	0.5	10%	CC
R39	R12	1k	Ohm	0.5	10%	CC
R40	R12	590k	Ohm	0.5	10%	CC
R41	R12	10k	Ohm	0.5	10%	CC
R42	R12	100k	Ohm	0.5	10%	CC
R43	R12	33k	Ohm	0.5	10%	CC
R44	R12	100	Ohm	0.5	10%	CC
R45	R12	330k	Ohm	0.5	10%	CC
R46	R12	10k	Ohm	0.5	10%	CC
R47	R12	1k	Ohm	0.5	10%	CC
R48	R12	100	Ohm	0.5	10%	CC
R49	R12	22k	Ohm	0.5	10%	CC
R50	R12	10k	Ohm	0.5	10%	CC
R51	R12	1k	Ohm	0.5	10%	CC
R52	R12	1k	Ohm	0.5	10%	CC

 Copyright 2004 - K4OAH

ID	Photo Page	Value	Unit	V	Tol	Type
C1	R13	0.01	uF	16	+80 -20%	DC
C2	R13	0.01	uF	16	+80 -20%	DC
C3	R13	7-60	pF			Cer Trim
C4	R13	47	pF		5%	NPO Cer
C5	R13	0.68	pF		10%	NPO Cer
C6	R13	7-60	pF			Cer Trim
C7	R13	47	pF		5%	NPO Cer
C8	R13	0.01	uF	16	+80 -20%	DC
C9	R13	0.01	uF	16	+80 -20%	DC
C10	R13	0.01	uF	16	+80 -20%	DC
C11	R13	0.01	uF	16	+80 -20%	DC
C12	R13	0.1	uF	12	+80 -20%	DC
C13	R13	0.1	uF	12	+80 -20%	DC
C14	R13	220	pF		5%	SM
C15	R13	0.005	uF		20%	Z5U
C16	R12	5.3	pF			Tubular Cer
C17	R13	0.01	uF	16	+80 -20%	DC
C18	R13	47	pF		5%	NPO Cer
C19	R13	7-60	pF			Cer Trim
C20	R13	0.01	uF	16	+80 -20%	DC
C21	R13	0.01	uF	16	+80 -20%	DC
C22	R13	0.01	uF	16	+80 -20%	DC
C23	R13	0.01	uF	16	+80 -20%	DC
C24	R13	190	pF	200	5%	N330 Cer
C25	R13	7-60	pF			Cer Trim
C26	R13	0.01	uF	16	+80 -20%	DC
C27	R13	0.01	uF	16	+80 -20%	DC
C28	R13	0.01	uF	16	+80 -20%	DC
C29	R13	0.001	uF		20%	Z5U
C30	R13	0.01	uF	16	+80 -20%	DC
C31	R13	0.01	uF	16	+80 -20%	DC
C32	R13	150	pF		5%	SM
C33	R13	1	uF			Dip Tant
C34	R13	0.01	uF	16	+80 -20%	DC
C35	R13	0.001	uF		20%	Z5U
C36	R13	0.01	uF	16	+80 -20%	DC
C37	R13	68	pF		5%	SM
C38	R13	5	pF		5%	NPO Cer
C39	R13	33	pF		5%	NPO Cer
C40	R13	0.005	uF		20%	Z5U
C41	R13	0.005	uF		20%	Z5U
C42	R13	0.01	uF	16	+80 -20%	DC
C43	R13	0.01	uF	16	+80 -20%	DC
C44	R13	0.01	uF	16	+80 -20%	DC
C45	R13	0.01	uF	16	+80 -20%	DC
C46	R13	43	pF		5%	NPO Cer
C47	R13	0.01	uF	16	+80 -20%	DC

 Copyright 2004 - K4OAH

ID	Photo Page	Part	V			Type
Q1	R12	2N3633				Si NPN RF
Q2	R12	2N3633				Si NPN RF
Q3	R12	2N3633				Si NPN RF
Q4	R12	2N3394				Si NPN GP
Q5	R12	2N3394				Si NPN GP
Q6	R12	2N3563				NPN Si VHF/UHF
Q7	R12	2N5953				N-JFET RF
Q8	R12	2N5953				N-JFET RF
Q9	R12	2N3394				Si NPN GP
Q10	R12	2N3858				Si NPN HF Amp
Q11	R12	2N3394				Si NPN GP
Q12	R12	2N3394				Si NPN GP
Q13	R12	2N3394				Si NPN GP
Q14	R12	2N3394				Si NPN GP
Q15	R12	2N3858				Si NPN HF Amp
Q16	R12	2N3394				Si NPN GP
CR1	R12	1N270	80			Ge Signal
CR2	R12	1N270	80			Ge Signal

 Copyright 2004 - K4OAH

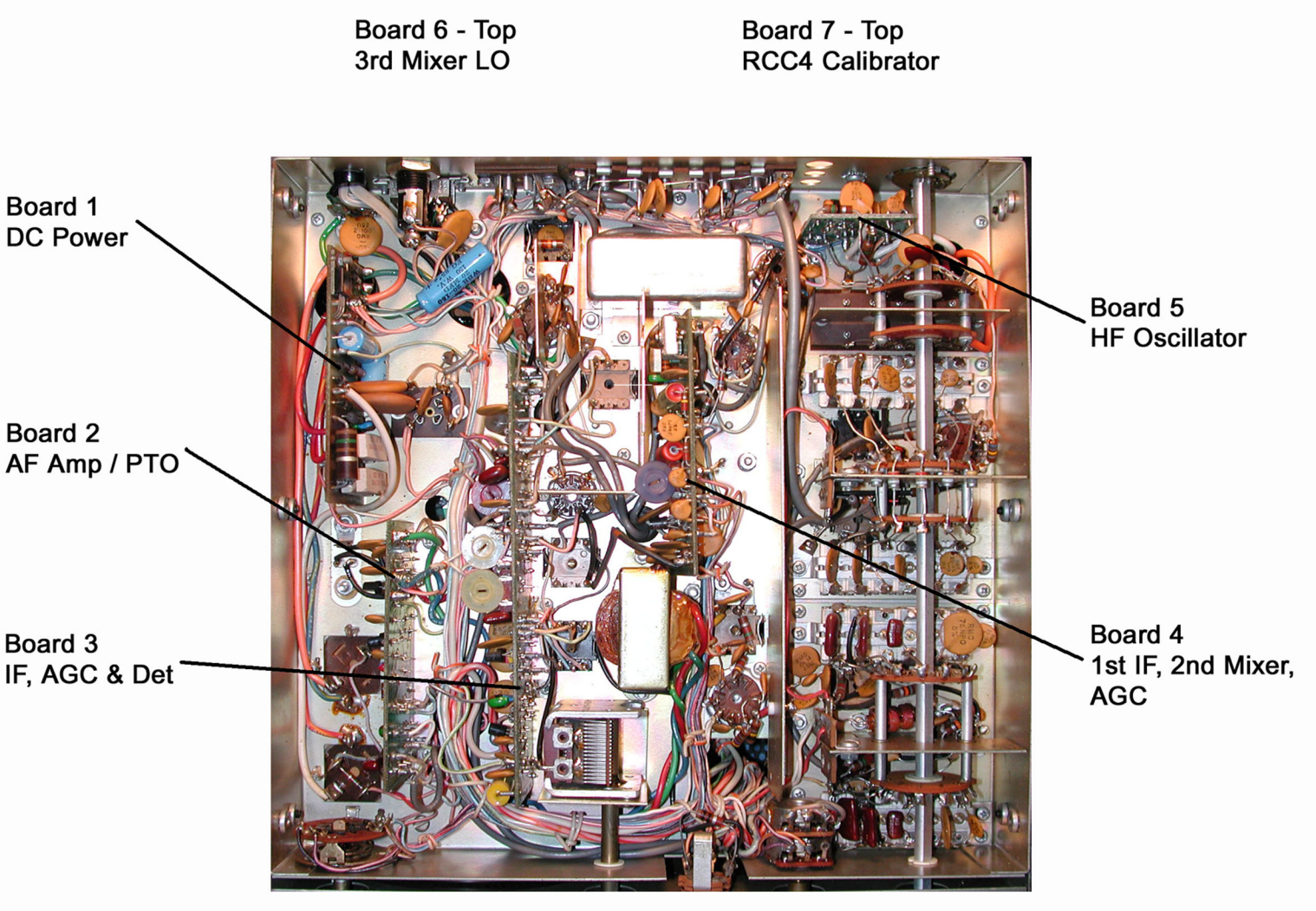

R L Drake R-4C
Board Locator
Figure R1

© 2004 - K4OAH

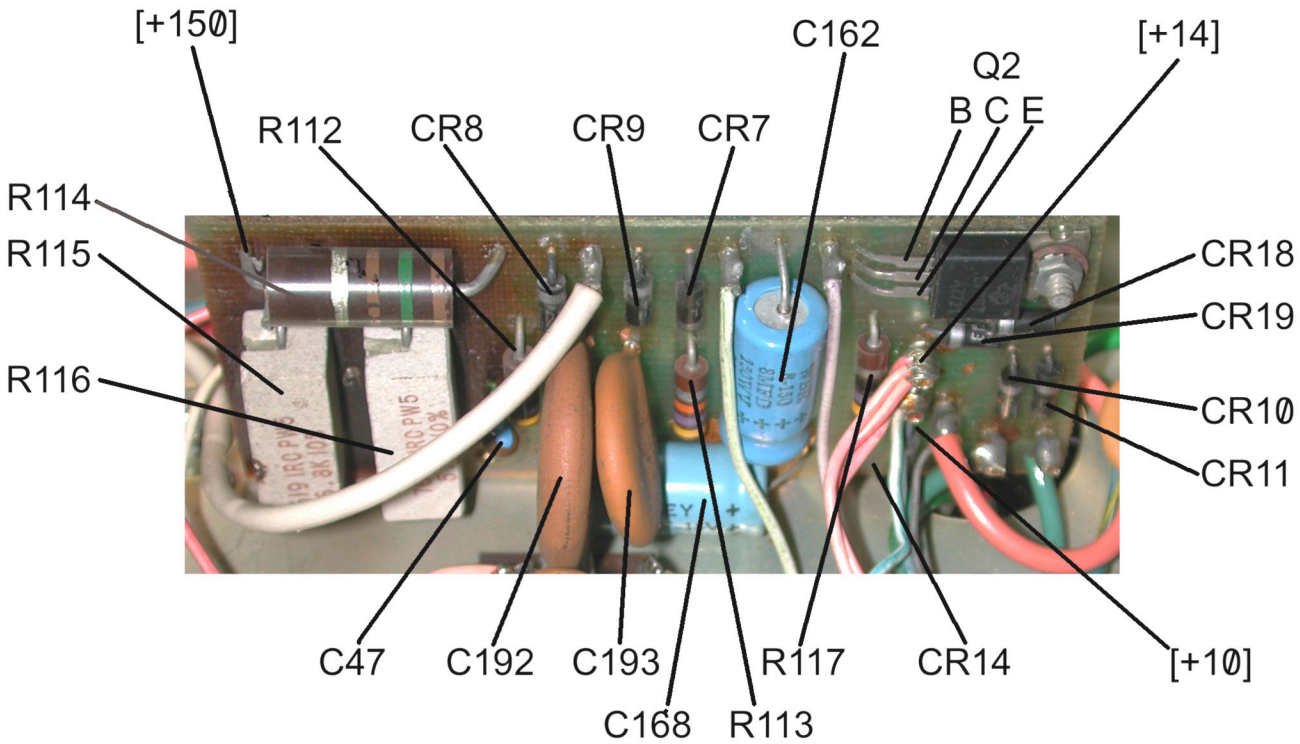

DC Power Supply

R L DRAKE R-4C
Board 1
Figure R2

© 2004 - K4OAH

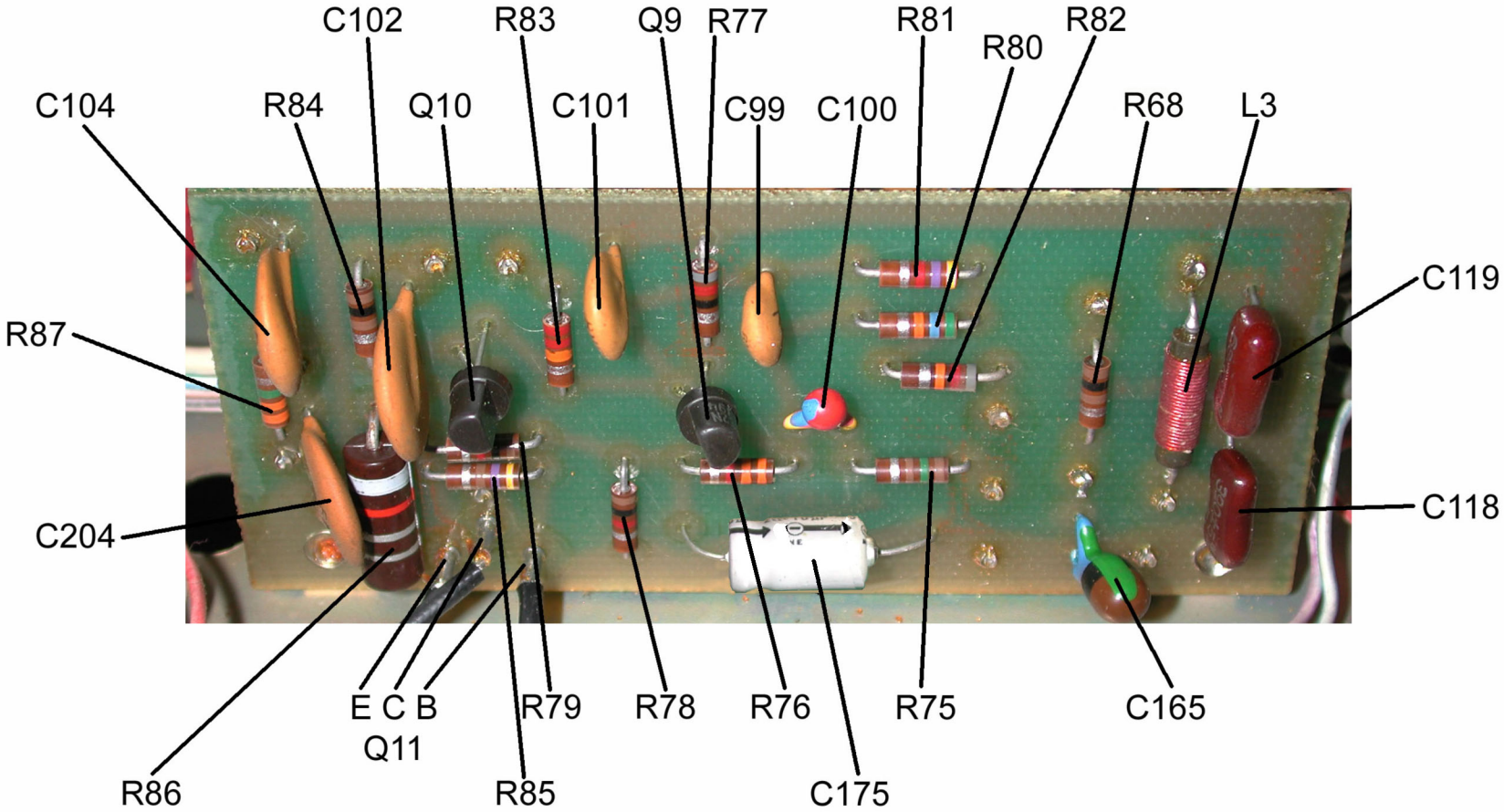

AF Amplifier
PTO PS Decoupling
PTO Output Match

R L DRAKE R-4C
Board 2
Figure R3

© 2004 - K4OAH

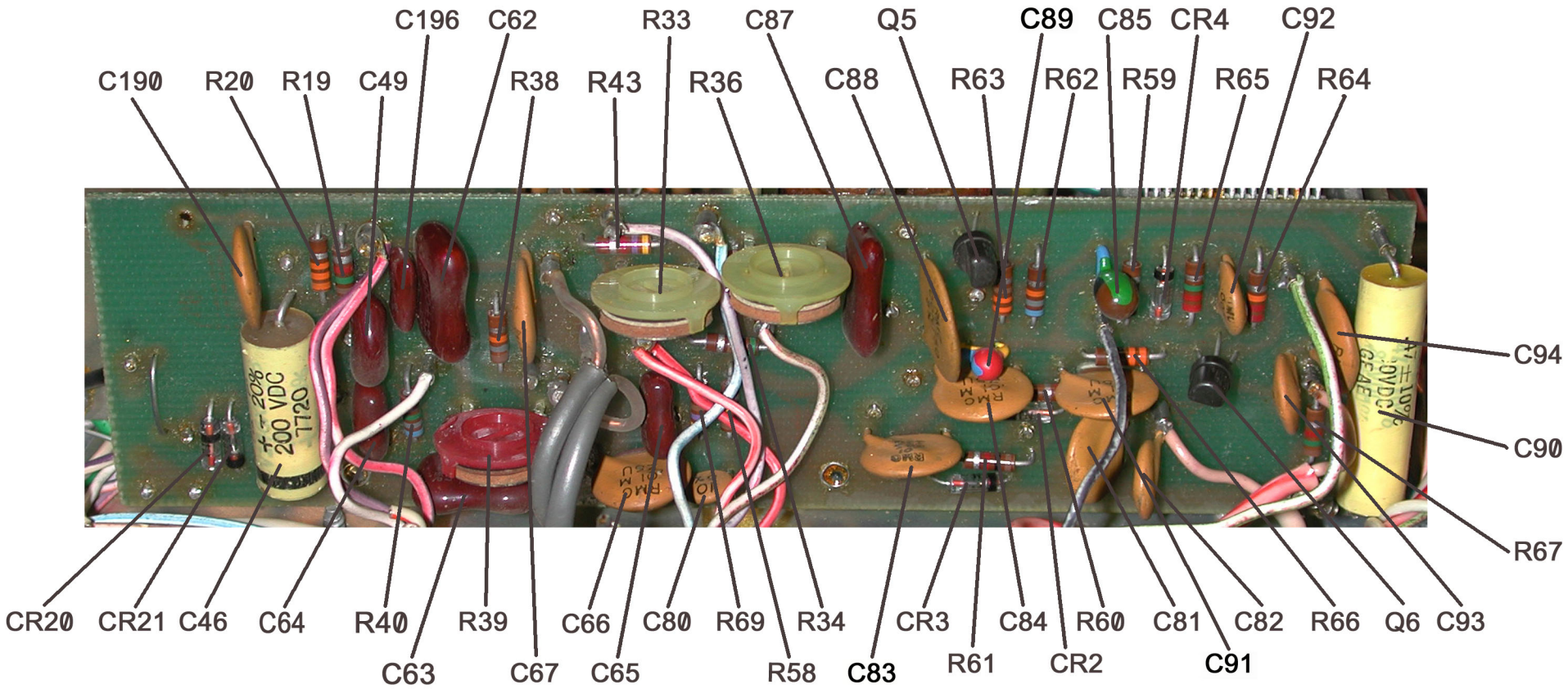

IF, AGC &
Detector

R L DRAKE R-4C
Board 3
Figure R4

© 2004 - K4OAH

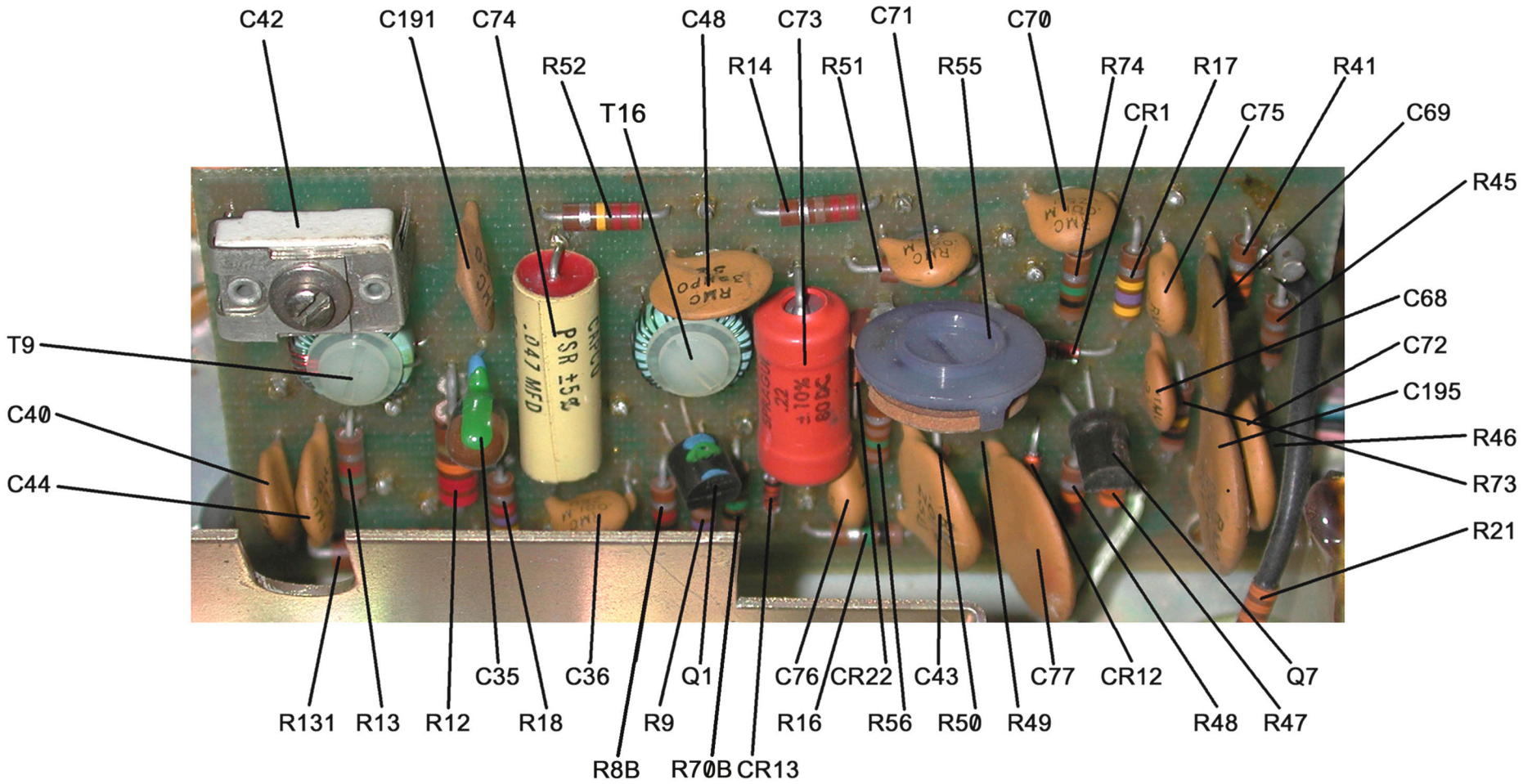

First IF Amplifier
2nd Mixer
AGC

R L DRAKE R-4C
Board 4
Figure R5

© 2004 - K4OAH

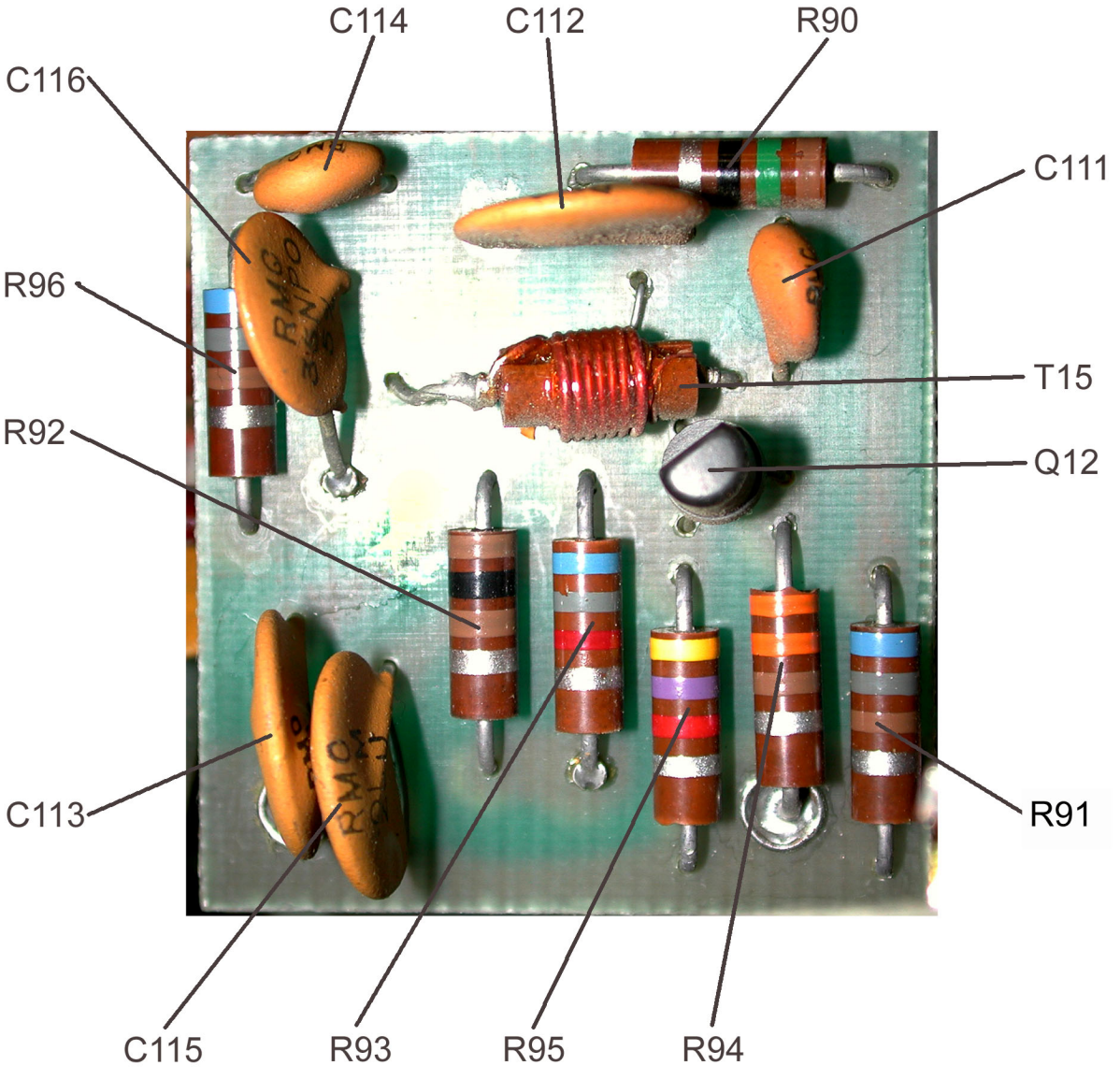

HF OSCILLATOR

R L DRAKE R-4C
Board 5
Figure R6

© 2004 - K4OAH

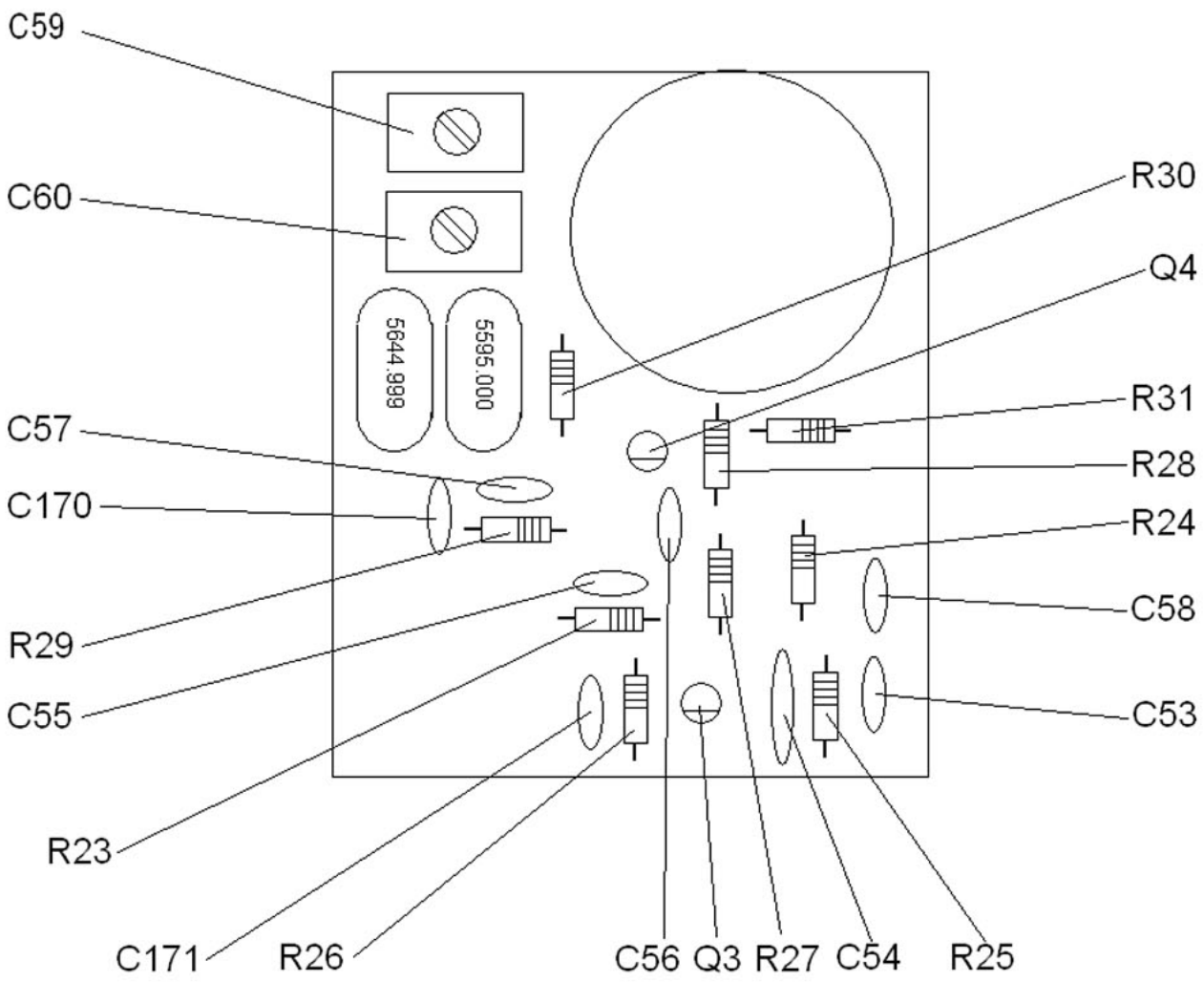

3rd Mixer LO

R L DRAKE R-4C
Board 6
Figure R7

© 2004 - K4OAH

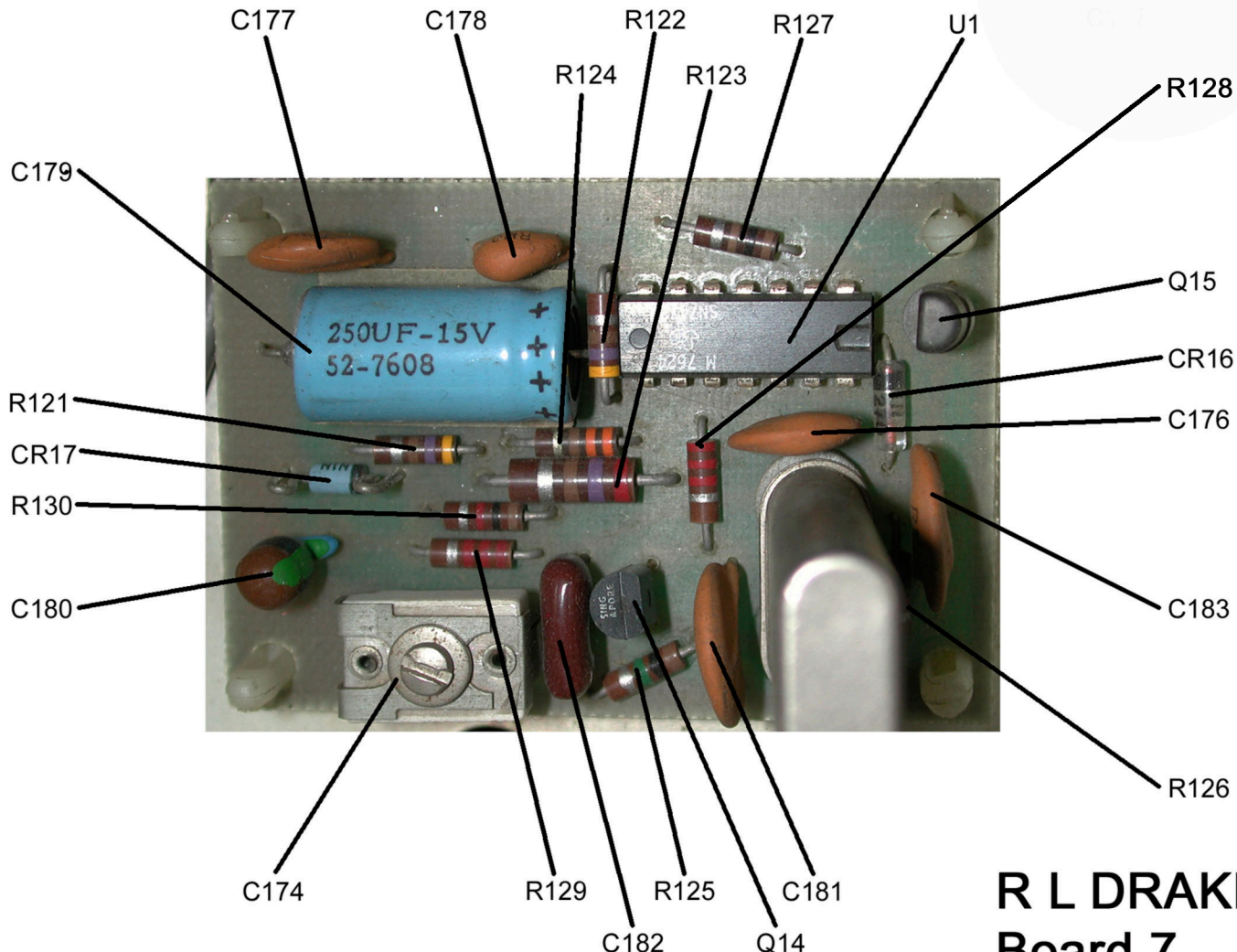

RCC4 Calibrator

R L DRAKE R-4C
Board 7
Figure R8

© 2004 - K4OAH

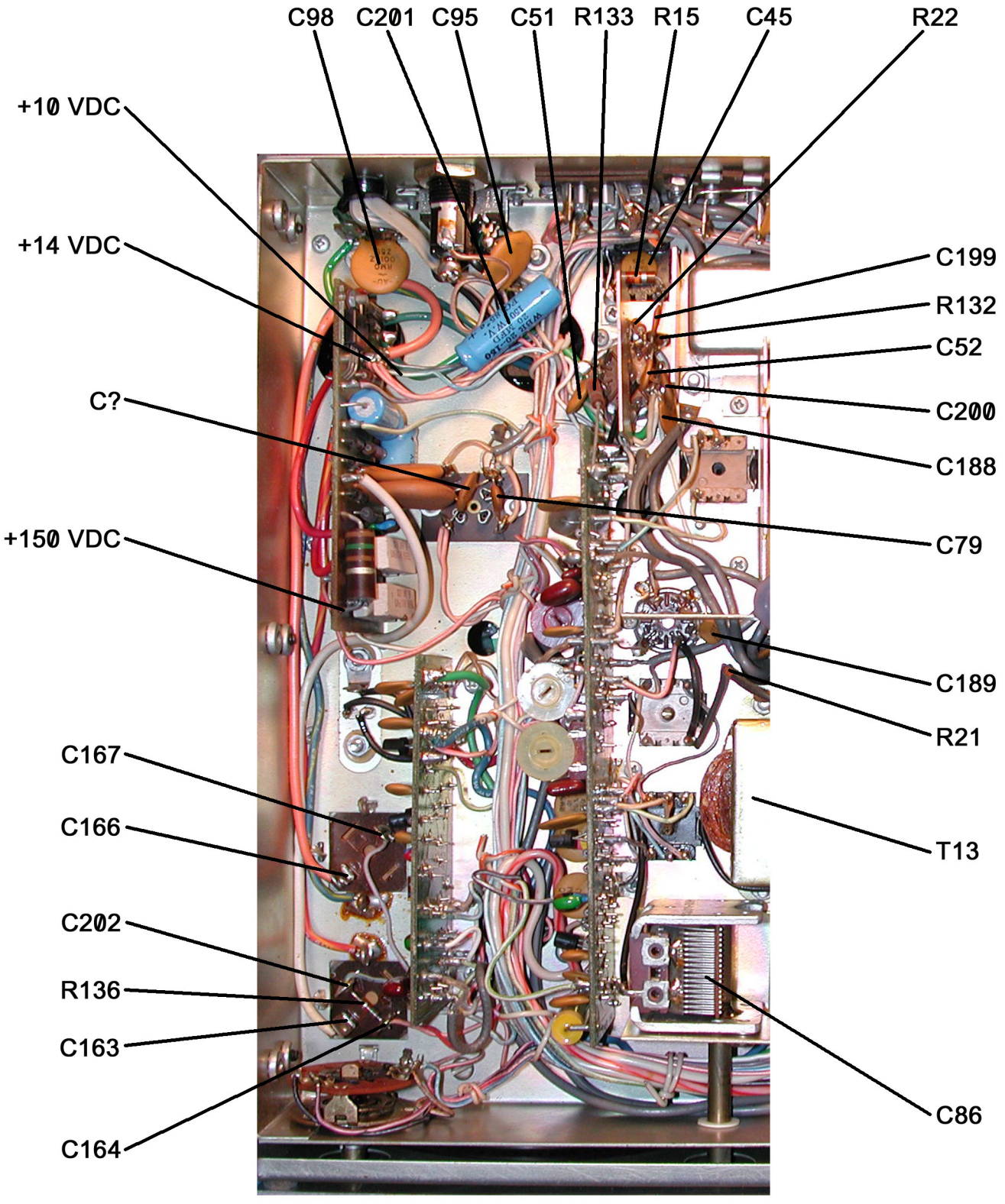

R L DRAKE R-4C
Chassis Bottom
Left Side
Figure R9

© 2004 - K4OAH

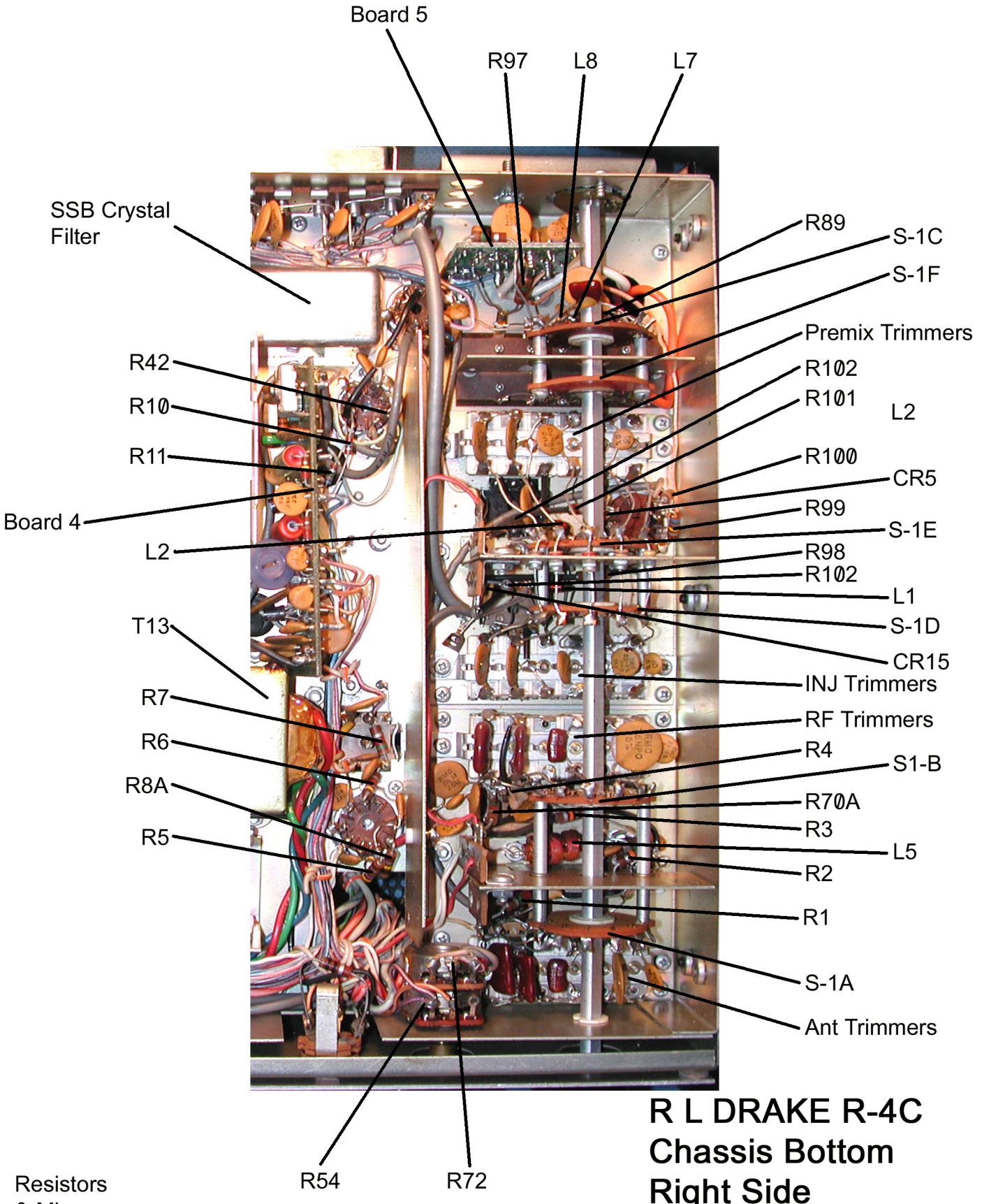

R L DRAKE R-4C
Chassis Bottom Right Side
Figure R10

© 2004 - K4OAH

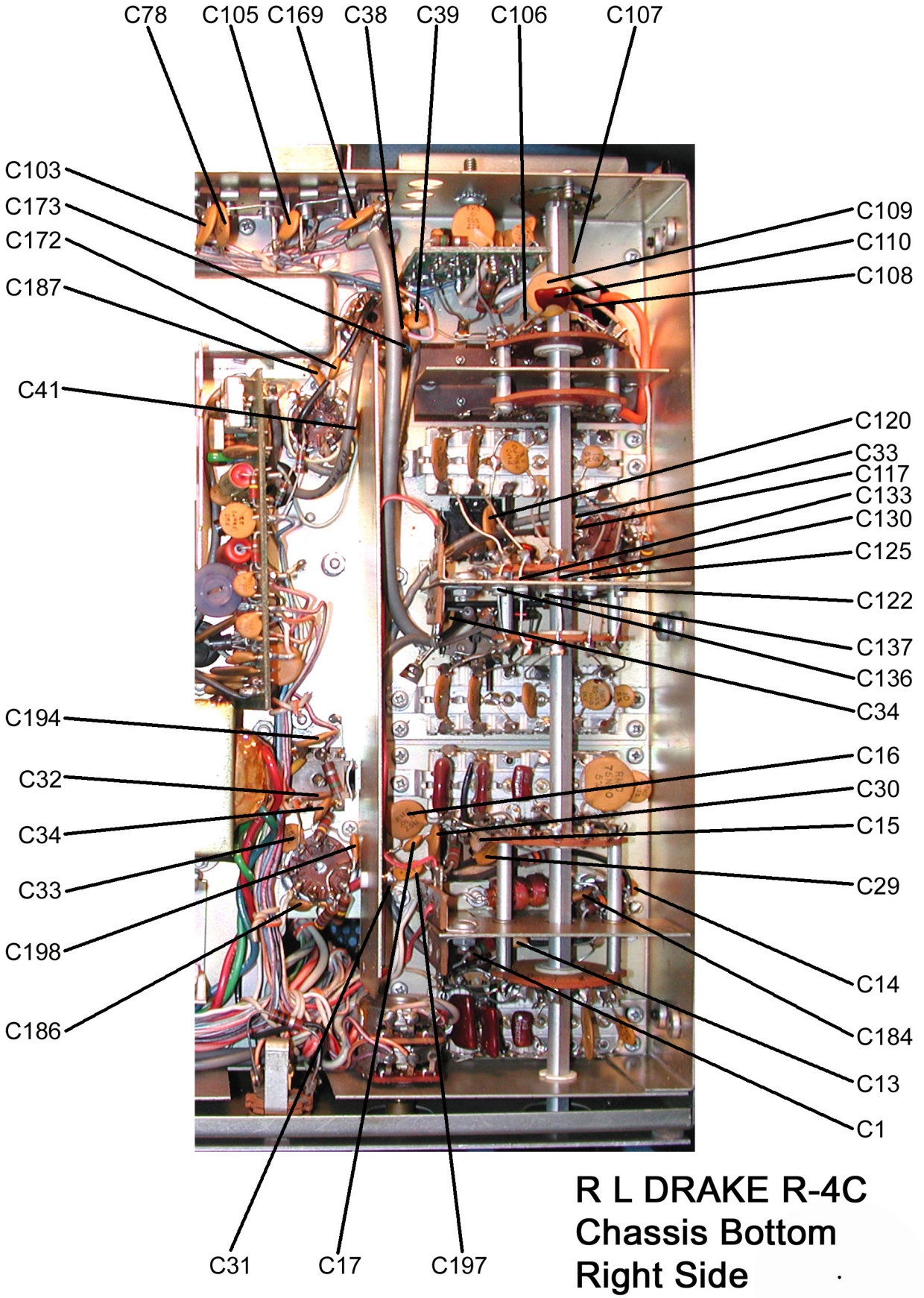

R L DRAKE R-4C
Chassis Bottom
Right Side
Figure R11

Capacitors

© 2004 - K4OAH

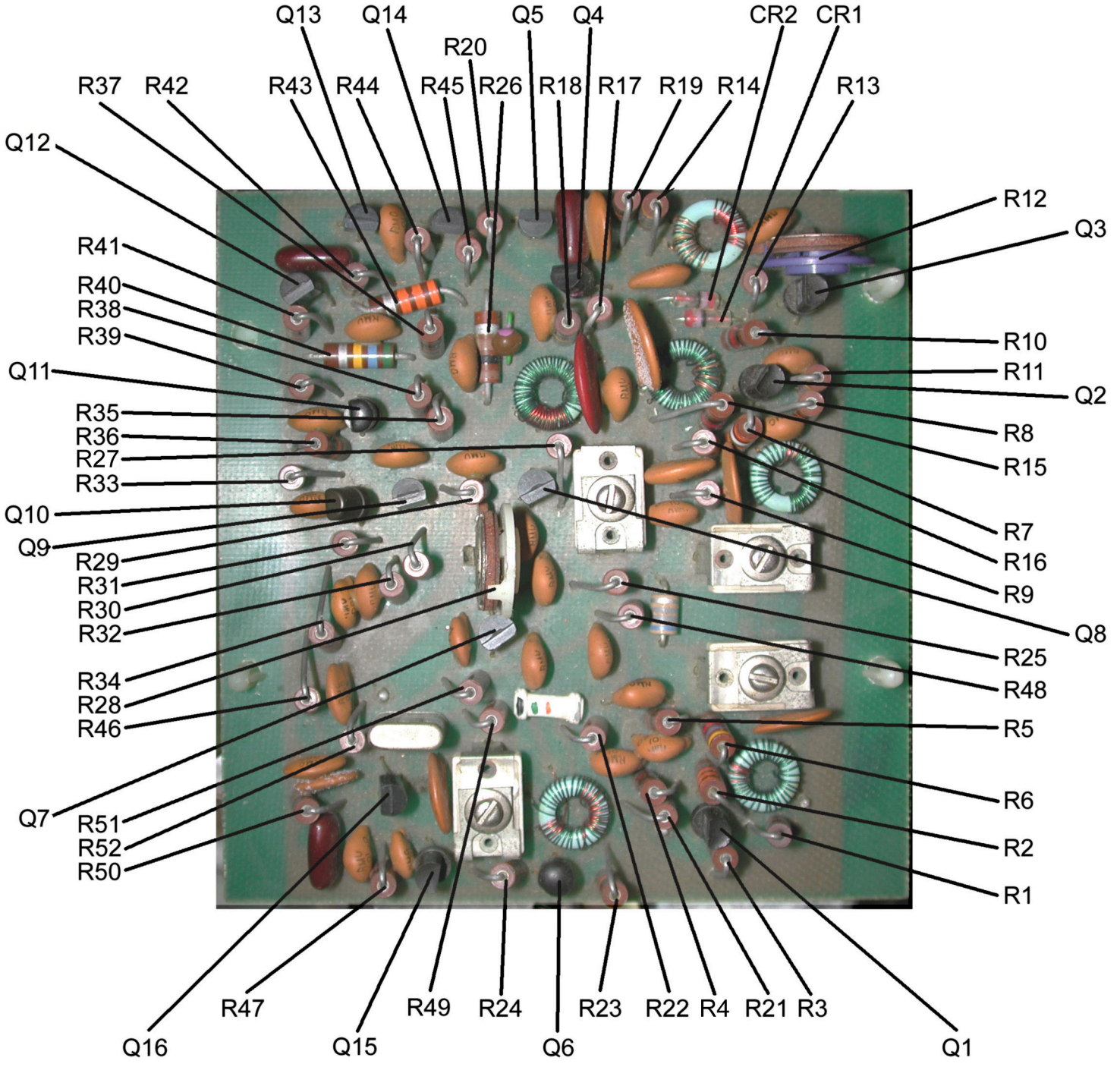

Resistors,
Semiconductors

R L DRAKE 4-NB
Noise Blanker R
Figure R12

© 2004 - K4OAH

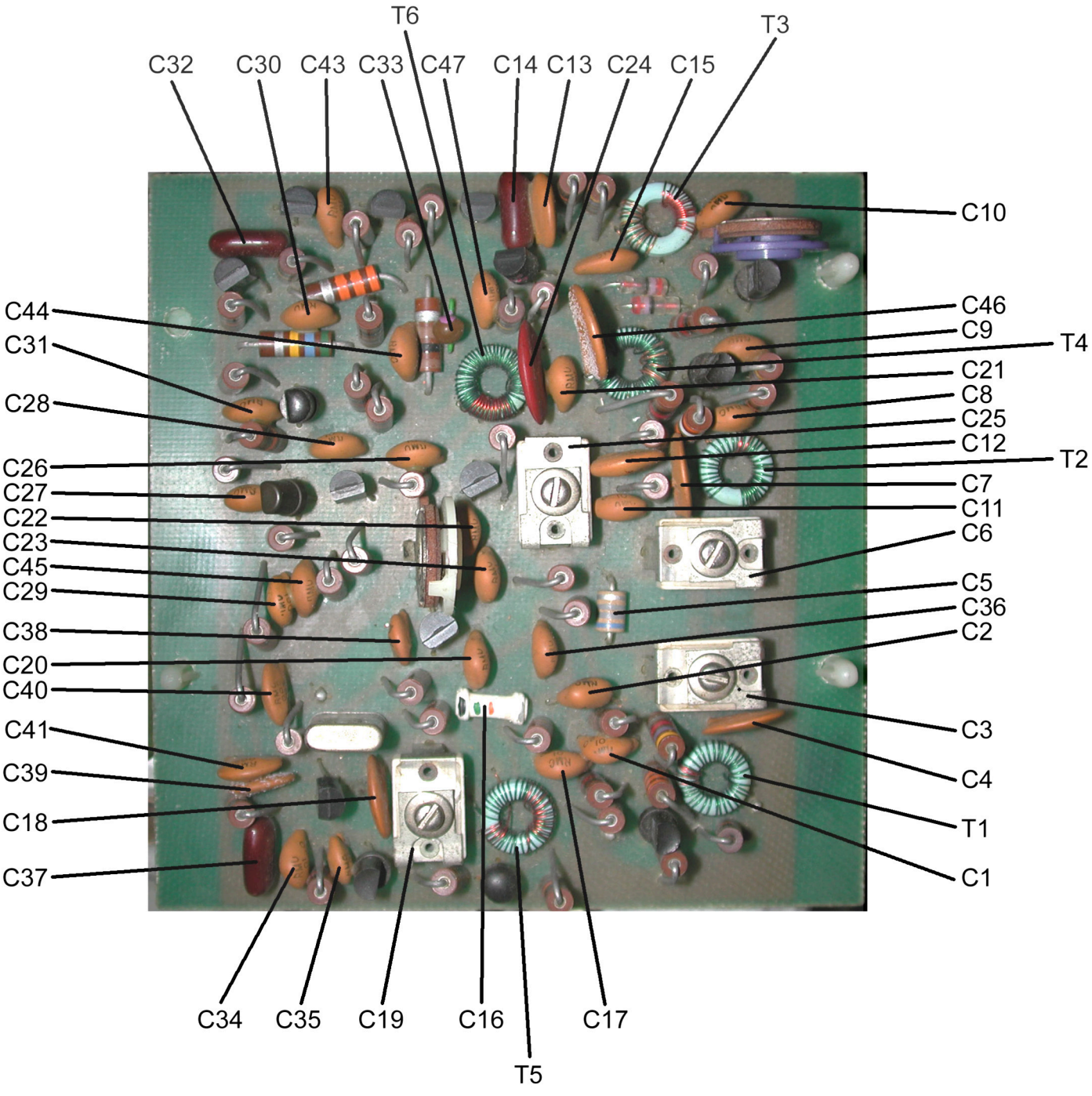

Capacitors,
Transformers

R L DRAKE 4-NB
Noise Blanker C
Figure R13

© 2004 - K4OAH

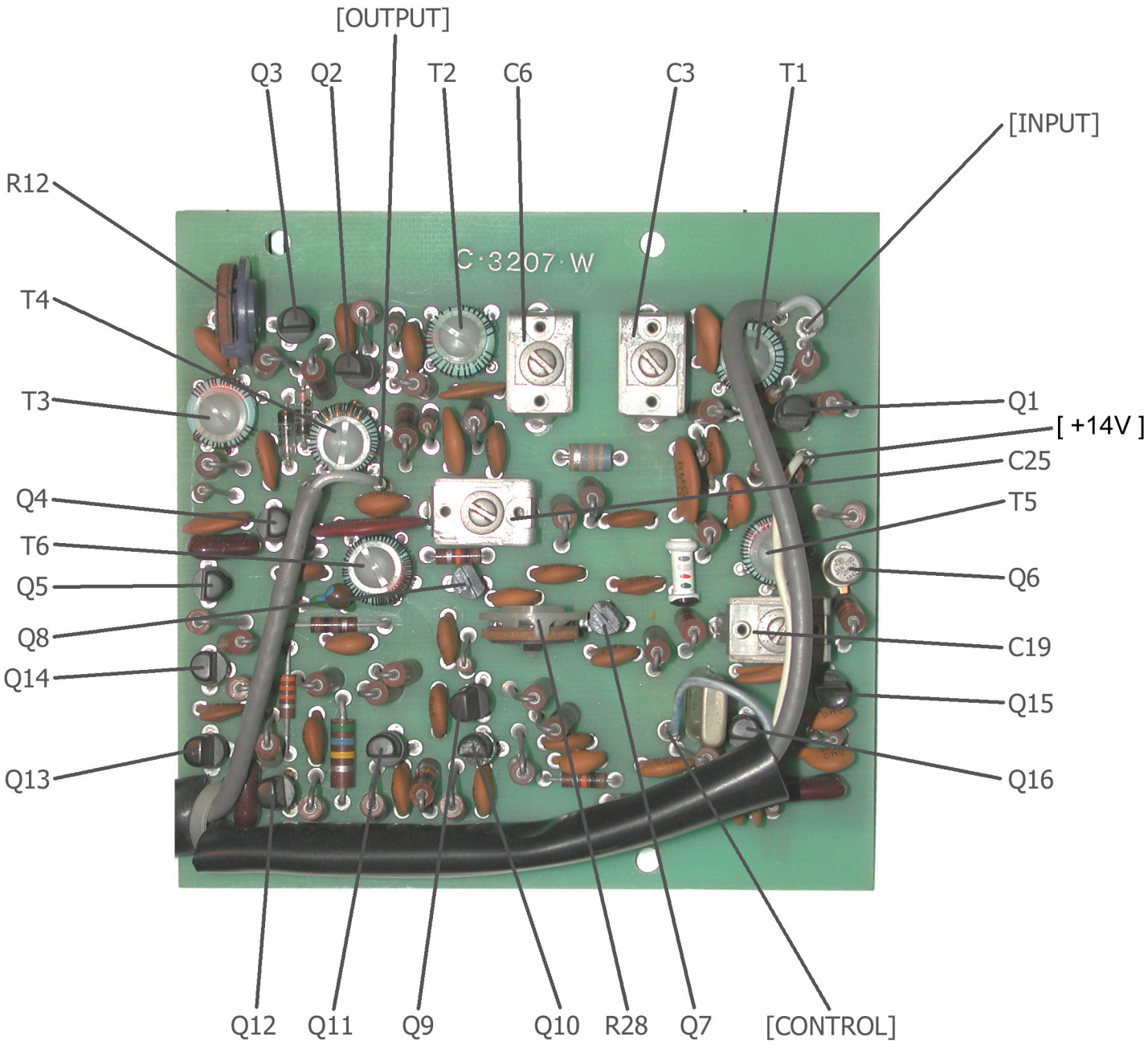

Adjustments, Semiconductors
& Transformers

R L DRAKE 4-NB
Noise Blanker (Late)

© 2008 - K4OAH

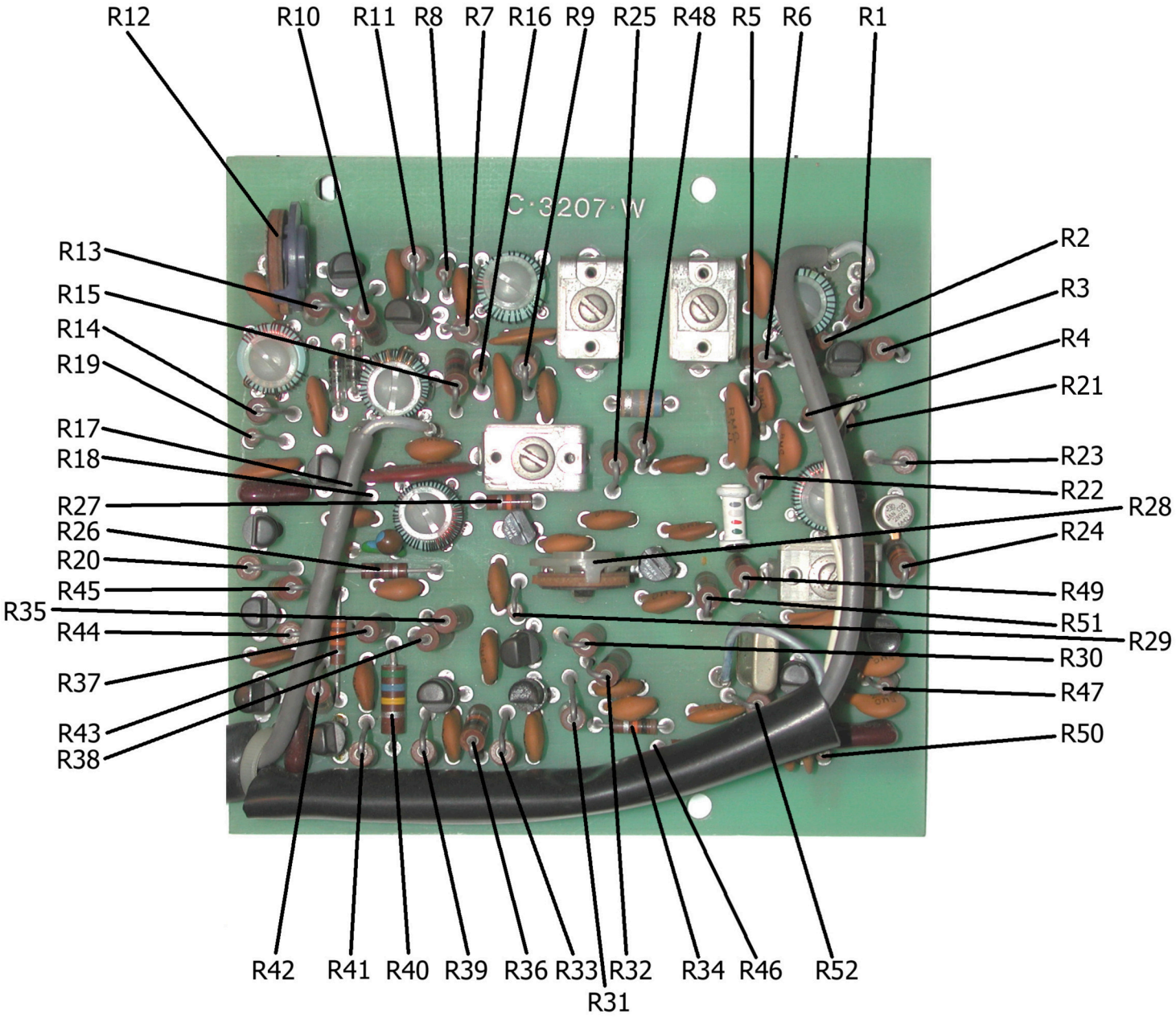

Resistors

R L DRAKE 4-NB
Noise Blanker (Late)

©2008 - K4OAH

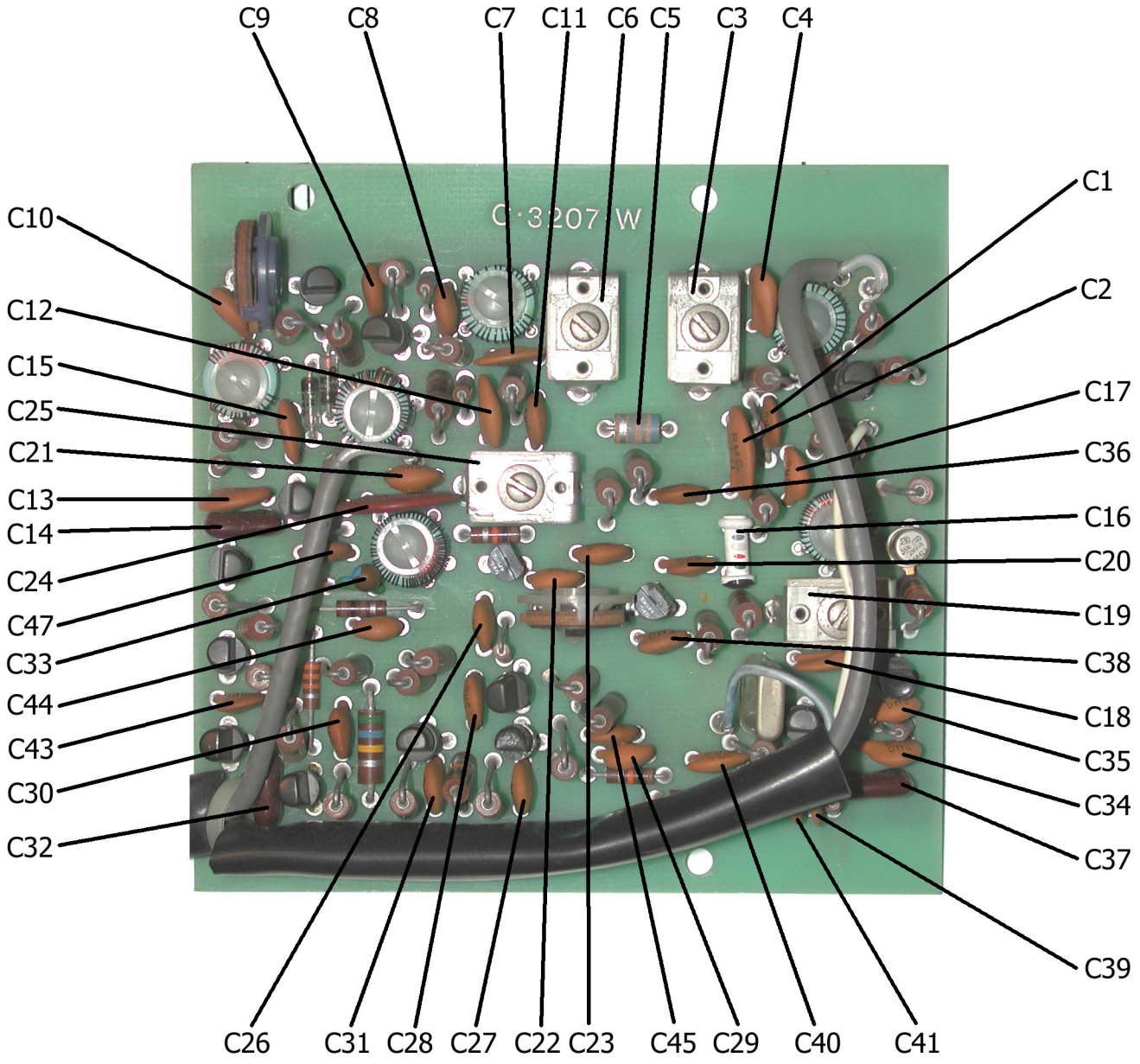

Note: C46 on reverse
across output cable.

Capacitors

R L DRAKE 4-NB
Noise Blanker (Late)

©2008 - K4OAH



Q Locators

R L DRAKE 4-NB
Noise Blanker (Late)

©2008 - K4OAH

ID	Photo Page	Value	Units	W	Tol	Type
R1	T2	1M	Ohm	0.25	10%	CC
R2	T2	330k	Ohm	0.25	10%	CC
R3	T2	470	Ohm	0.25	10%	CC
R4	T2	1M	Ohm	0.25	10%	CC
R5	T2	2.2M	Ohm	0.25	10%	CC
R6	T2	1M	Ohm	0.25	10%	CC
R7	T10	5k	Ohm	20	10%	WW
R8	T2	100	Ohm	0.25	10%	CC
R9	T2	6.8k	Ohm	0.25	10%	CC
R10	T2	100	Ohm	0.25	10%	CC
R11	T2	220k	Ohm	0.25	10%	CC
R12	T2	1k	Ohm	0.25	10%	CC
R13	T2	1M	Ohm	0.25	10%	CC
R14	T2	470	Ohm	0.25	10%	CC
R15	T2	1M	Ohm	0.25	10%	CC
R16	T2	100	Ohm	0.25	10%	CC
R17	T2	1.2k	Ohm	0.25	10%	CC
R18	T2	100	Ohm	0.25	10%	CC
R19	T2	47k	Ohm	0.25	10%	CC
R20	T9	470	Ohm	0.25	10%	CC
R21	T9	200	Ohm	0.5		Balance
R22	T9	150	Ohm	0.25	10%	CC
R23	T9	470	Ohm	0.25	10%	CC
R24	T9	15k	Ohm	0.25	10%	CC
R25	T3	1.5k	Ohm	0.25	10%	CC
R26	T3	47k	Ohm	0.25	10%	CC
R27	T9	1M	Ohm	0.25	10%	CC
R28	T7	220	Ohm	0.25	10%	CC
R29	T3	15k	Ohm	0.25	10%	CC
R30	T3	1M	Ohm	0.25	10%	CC
R31	T3	1.5k	Ohm	0.25	10%	CC
R32	T11	1.5k	Ohm	0.5	10%	CC
R33	T7	330k	Ohm	0.25	10%	CC
R34	T7	330	Ohm	0.25	10%	CC
R35	T7	150k	Ohm	0.25	10%	CC
R36	T7	68k	Ohm	0.25	10%	CC
R37	T3	22k	Ohm	0.25	10%	CC
R38	T7	150	Ohm	0.25	10%	CC
R39	T7	1.5k	Ohm	0.25	10%	CC
R40	11	150	Ohm	0.5	10%	CC
R41	T7	56k	Ohm	0.25	10%	CC
R42	T7	2.2M	Ohm	0.25	10%	CC
R43	T12	150	Ohm	0.5	10%	CC
R44	T12	680	Ohm	0.5	10%	CC
R45	T11	15k	Ohm	0.5	10%	CC
R46	T12	47k	Ohm	0.5	10%	CC
R47	T8	1.5k	Ohm	0.25	10%	CC
R48	T8	330k	Ohm	0.25	10%	CC
R49	T6	1.5k	Ohm	2	10%	CC
R50	T12	68	Ohm	0.5	10%	CC
R51	T12	68	Ohm	0.5	10%	CC

 Copyright 2004 - K4OAH

ID	Photo Page	Value	Units	W	Tol	Type
R52	T8	220k	Ohm	0.25	10%	CC
R53	T12	15	Ohm	1	10%	CC
R54	T12	15	Ohm	1	10%	CC
R55	T8	22k	Ohm	0.25	10%	CC
R56	T6	47	Ohm	0.25	10%	CC
R57	T6	680	Ohm	0.25	10%	CC
R58	METER SWITCH	Selected	Ohm	0.25	10%	CC
R59	T6	3.3	Ohm	1	10%	CC
R60	T4	15k	Ohm	2	10%	CC
R61	T4	15k	Ohm	1	10%	CC
R62	T4	22M	Ohm	0.25	10%	CC
R63	T9 & T3	220	Ohm	0.5	10%	CC
R64	T3	330k	Ohm	0.25	10%	CC
R65	T3	100k	Ohm	0.25	10%	CC
R66	T3	220k	Ohm	0.25	10%	CC
R67	T3	220k	Ohm	0.25	10%	CC
R68	T3	1M	Ohm	0.25	10%	CC
R69	T3	1M	Ohm	0.25	10%	CC
R70	N/A		Ohm	0.25	10%	CC
R71	T3	22k	Ohm	0.25	10%	CC
R72	SSB/AM DELAY	15M	Ohm	0.5		Rear
R73	CW DELAY	15M	Ohm	0.5		Rear
R74	T3	100k	Ohm	0.25	10%	CC
R75	T3	820	Ohm	0.25	10%	CC
R76	T3	100k	Ohm	0.25	10%	CC
R77	VOX GAIN	500k	Ohm	0.5		Rear
R78	T3	220k	Ohm	0.25	10%	CC
R79	T3	2.2M	Ohm	0.25	10%	CC
R80	T3	330k	Ohm	0.25	10%	CC
R81	T4	220k	Ohm	0.25	10%	CC
R82	T4	3.3k	Ohm	0.25	10%	CC
R83	T4	68k	Ohm	0.25	10%	CC
R84	T4	22M	Ohm	0.25	10%	CC
R85	T4	22M	Ohm	0.25	10%	CC
R86	ANTI-VOX GAIN	100k	Ohm	0.5		Rear
R87	T4	3.3M	Ohm	0.25	10%	CC
R88	XMIT GAIN	500k	Ohm	0.5		Front
R89	T4	47k	Ohm	0.25	10%	CC
R90	T4	47k	Ohm	0.25	10%	CC
R91	T4	330k	Ohm	0.25	10%	CC
R92	T9 & T3	6.8k	Ohm	0.25	10%	CC
R93	T4	1M	Ohm	0.25	10%	CC
R94	MIC JACK	47k	Ohm	0.25	10%	CC
R95	T7	1M	Ohm	0.25	10%	CC
R96	T3	1M	Ohm	0.25	10%	CC
R97	T4	100k	Ohm	0.25	10%	CC
R98	T4	100k	Ohm	0.25	10%	CC
R99	T4	100k	Ohm	0.25	10%	CC
R100	T7	100k	Ohm	0.25	10%	CC
R101	T4	150k	Ohm	0.25	10%	CC
R102	T4	1M	Ohm	0.25	10%	CC

 Copyright 2004 - K4OAH

ID	Photo Page	Value	Units	W	Tol	Type
R103	T6	1M	Ohm	0.25	10%	CC
R104	T6	2.2M	Ohm	0.25	10%	CC
R105	XMIT GAIN	500k	Ohm	0.5		Front
R106	T6	15k	Ohm	0.25	10%	CC
R107	T3	12M	Ohm	0.25	10%	CC
R108	T5	100	Ohm	0.25	10%	CC
R109	T5	6.8k	Ohm	0.25	10%	CC
R110	[S-5B (R)]	1.5k	Ohm	0.5	10%	CC
R111	T5	330	Ohm	0.25	10%	CC
R112	T5	4.7k	Ohm	0.25	10%	CC
R113	T5	680	Ohm	0.25	10%	CC
R114	T7	150	Ohm	0.25	10%	CC
R115	T11	68k	Ohm	0.5	10%	CC
R116	T11	330k	Ohm	0.5	10%	CC
R117	T11	1k	Ohm	0.25	10%	CC
R118	[S-5A (R)]	560	Ohm	0.25	10%	CC
R119	[PTO]	100	Ohm	0.25	10%	CC
R120	[PTO]	100	Ohm	0.25	10%	CC
R121	[PTO]	22k	Ohm	0.25	10%	CC
R122	[PTO]	6.8k	Ohm	0.25	10%	CC
R123	[PTO]	330	Ohm	0.25	10%	CC
R124	[PTO]	560	Ohm	0.25	10%	CC
R125	[PTO]	330	Ohm	0.25	10%	CC
R126	[PTO]	1M	Ohm	0.25	10%	CC
R127	T7	68k	Ohm	0.25	10%	CC
R128	T11	220	Ohm	0.25	10%	CC
R129	T11	68k	Ohm	0.25	10%	CC
R130	T3	1M	Ohm	0.25	10%	CC
R131	T3	100k	Ohm	0.25	10%	CC
R132	T7	39	Ohm	2	10%	CC
R133	T7	39	Ohm	2	10%	CC
R134	T2	22k	Ohm	0.25	10%	CC
R135	T6	100	Ohm	0.25	10%	CC
R136	T11	10k	Ohm	0.5	10%	CC
R137	T11	68k	Ohm	0.5	10%	CC
R138	T11	47k	Ohm	0.5	10%	CC
R139	T3	1M	Ohm	0.25	10%	CC
R140	T5	680	Ohm	0.25	10%	CC
R141	T5	15	Ohm	0.25	10%	CC
R142	T5	1.5k	Ohm	0.25	10%	CC
R143	T9 & T3	1.5k	Ohm	1	10%	CC

 Copyright 2004 - K4OAH

ID	Photo Page	Value	Unit	V	Tol	Type
C1	T2	0.01	uF		20%	Z5U Cer
C2	T2	0.01	uF		20%	Z5U Cer
C3	T2	0.01	uF		20%	Z5U Cer
C4	T2	470	pF		20%	Z5U Cer
C5	T2	470	pF		20%	Z5U Cer
C6	T2	5-25	pF			Cer Trim
C7	T2	5	pF		5%	NPO Cer
C8	T2	0.01	uF		20%	Z5U Cer
C9	T2	10	pF		5%	NPO Cer
C10	T2	15	pF		5%	NPO Cer
C11	T2	0.01	uF		20%	Z5U Cer
C12	T2	0.01	uF		20%	Z5U Cer
C13	T2	0.01	uF		20%	Z5U Cer
C14	T2	0.01	uF		20%	Z5U Cer
C15	Inside T14	220	pF		5%	NPO Cer
C16	T9	2.2	pF		10%	Tubular Cer
C17	T9	1-8	pF			Cer Trim
C18	T9	0.005	uF		20%	Z5U Cer
C19	T10	27	pF		5%	NPO Cer
C20	T9	0.005	uF		20%	Z5U Cer
C21	T2	27	pF		5%	NPO Cer
C22	T9 & T10	0.001	uF		20%	Z5U Cer
C23	T10	0.01	uF		20%	Z5U Cer
C24	T10	0.005	uF		20%	Z5U Cer
C25	T3	0.005	uF		20%	Z5U Cer
C26	T3	0.47	uF		10%	Film
C27	T11	39	pF		5%	NPO Cer
C28	T11	100	pF	500	5%	Dipped SM
C29	T11	0.001	uF		20%	Z5U Cer
C30	T7	0.001	uF		20%	Z5U Cer
C31	T7	0.005	uF		20%	Z5U Cer
C32	T7	0.01	uF		20%	Z5U Cer
C33	T7	0.001	uF		20%	Z5U Cer
C34	T11	7-100	pF			Cer Trim
C35	T11	560	pF	500	5%	Dipped SM
C36	T11	37-250	uF			Cer Trim
C37	T11	1090	pF	500	2%	Dipped SM
C38	T11	1-12	pF			Cer Trim
C39	T11	1-12	pF			Cer Trim
C40	T11	2-25	pF			Cer Trim
C41	T11	68	pF		5%	NPO Cer
C42	T11	4-40	pF			Cer Trim
C43	T11	165	pF	500	5%	Dipped SM
C44	T11	7-100	pF			Cer Trim
C45	T11	0.01	uF		20%	Z5U Cer
C46	T7	500	pF	500	5%	Dipped SM
C47	T11	0.001	uF		20%	Z5U Cer
C48	T7	2	pF		10%	Tubular Cer
C49	T11	0.001	uF		20%	Z5U Cer
C50	T12	500	pF	500	5%	Dipped SM
C51	T12	7-100	pF			Cer Trim

 Copyright 2004 - K4OAH

ID	Photo Page	Value	Unit	V	Tol	Type
C52	T12	260	pF		5%	NPO Cer
C53	T12	37-250	pF			Cer Trim
C54	T12	1090	pF	500	2%	Dipped SM
C55	T12	1-12	pF			Cer Trim
C56	T12	20	pF		5%	NPO Cer
C57	T12	2-25	pF			Cer Trim
C58	T12	68	pF		5%	NPO Cer
C59	T12	4-40	pF			Cer Trim
C60	T12	165	pF	500	5%	Dipped SM
C61	T12	7-42	pF			Cer Trim
C62	T12	500	pF	500	5%	Dipped SM
C63	T12	0.001	uF			FT
C64	T13 & T8	2.7-8.4	pF			Cer Trim
C65	T13	6	pF	2k	20%	NPO Cer
C66	T10	0.005	uF		20%	Z5U Cer
C67	T13	0.005	uF		20%	Z5U Cer
C68	T12	0.001	uF			FT
C69	T12	470	pF		20%	Z5U Cer
C70	T12	470	pF		20%	Z5U Cer
C71	T12	470	pF		20%	Z5U Cer
C72	T12	470	pF		20%	Z5U Cer
C73	T12	470	pF		20%	Z5U Cer
C74	T12	470	pF		20%	Z5U Cer
C75	T12	0.005	uF		20%	Z5U Cer
C76	T12	0.005	uF		20%	Z5U Cer
C77	T8	0.02	uF	100	+80-20%	Disc Ceramic
C78	T8	0.05	uF	100	20%	Z5U Cer
C79	T12	0.001	uF			FT
C80	T13	1.5	pF	2k		NPO Cer
C81	T8	150	pF	500	5%	Dipped SM
C82	T6	10	pF		5%	NPO Cer
C83	T13	0.0027	uF	2k	20%	Z5U Cer
C84	T13	14-358	pF			PLATE
C85	T12	100	pF	2k	5%	N150 Cer
C86	T12	200	pF	2k	5%	N470 Cer
C87	T13	150	pF	500	5%	Dipped SM
C88	T12	270	pF	500	5%	Dipped SM
C89	T12	865	pF	500	5%	Dipped SM
C90	T13	14-486	pF			LOAD
C91	T6	100	pF	500	5%	Dipped SM
C92	T3	0.001	uF		20%	Z5U Cer
C93	T3	0.02	uF		20%	Z5U Cer
C94	T3	0.005	uF		20%	Z5U Cer
C95	T5	0.01	uF		20%	Z5U Cer
C96	T5	0.01	uF		20%	Z5U Cer
C97	T5	0.01	uF		20%	Z5U Cer
C98	T9	10	uF	25	+80-20%	Twist-Lok
C99	T3	0.1	uF	200	20%	Film
C100	T3	0.02	uF		20%	Z5U Cer
C101	T4	0.01	uF		20%	Z5U Cer
C102	T4	1	uF			Dipped Elec

 Copyright 2004 - K4OAH

ID	Photo Page	Value	Unit	V	Tol	Type
C103	T4	0.005	uF		20%	Z5U Cer
C104	T4	0.01	uF		20%	Z5U Cer
C105	T4	0.01	uF		20%	Z5U Cer
C106	T4	470	pF		20%	Z5U Cer
C107	T9	60	uF	250	+80-20%	Twist-Lok
C108	T4	0.005	uF		20%	Z5U Cer
C109	MIC JACK	68	pF		5%	N750 Cer
C110	T4	500	pF		10%	X5F Cer
C111	T4	500	pF		110%	X5F Cer
C112	T4	500	pF		210%	X5F Cer
C113	T4	0.005	uF		20%	Z5U Cer
C114	T4	0.01	uF		20%	Z5U Cer
C115	T3	0.01	uF		20%	Z5U Cer
C116	T5	0.01	uF		20%	Z5U Cer
C117	T5	0.01	uF		20%	Z5U Cer
C118	T5	0.01	uF		20%	Z5U Cer
C119	T5	0.01	uF		20%	Z5U Cer
C120	T11	0.001	pF		20%	Z5U Cer
C121	FF XTAL TRIM		pF			Cer Trim
C122	[PTO]	0.01	uF		20%	Z5U Cer
C123	[PTO]	0.01	uF		20%	Z5U Cer
C124	[PTO]	390	pF	500	5%	Dipped SM
C125	[PTO]	0.01	uF		20%	Z5U Cer
C126	[PTO]	10	uF			Dipped Elec
C127	[PTO]	80	pF	500	2%	Dipped SM
C128	[PTO]	0.01	uF		20%	Z5U Cer
C129	[PTO]	5	pF		0.25 pF	N750 Cer
C130	[PTO]	7	pF			Var Selected
C131	[PTO]	33	pF			Var Selected
C132	[PTO]	45	pF			Var Selected
C133	[PTO]	12	pF			Var Selected
C134	[PTO]	10	pF			Var Selected
C135	[PTO]	0.01	uF		20%	Z5U Cer
C136	T7	0.01	uF		20%	Z5U Cer
C137	T11	3.3	pF			Tubular Cer
C138	T11	0.68	pF		10%	Axial Cer
C139	T11	1	pF		10%	Axial Cer
C140	T11	0.47	pF		10%	Axial Cer
C141	T11	0.39	pF		10%	Axial Cer
C142	T11	1.5	pF		10%	Axial Cer
C143	T11	0.01	uF		10%	Axial Cer
C144	T11	2-25	pF			Cer Trim
C145	T11	62	pF		5%	NPO Cer
C146	T11	2-25	pF			Cer Trim
C147	T11	20	pF		5%	NPO Cer
C148	T11	1-12	pF			Cer Trim
C149	T11	5	pF		5%	NPO Cer
C150	T11	1-12	pF			Cer Trim
C151	T11	12	pF		5%	NPO Cer
C152	T11	1-12	pF			Cer Trim
C153	T11	33	pF		5%	NPO Cer

 Copyright 2004 - K4OAH

ID	Photo Page	Value	Unit	V	Tol	Type
C154	T11	2-25	pF			Cer Trim
C155	T11	2-25	pF			Cer Trim
C156	T11	62	pF		5%	NPO Cer
C157	T11	2-25	pF			Cer Trim
C158	T11	20	pF		5%	NPO Cer
C159	T11	1-12	pF			Cer Trim
C160	T11	5	pF		5%	NPO Cer
C161	T11	1-12	pF			Cer Trim
C162	T11	12	pF		5%	NPO Cer
C163	T11	1-12	pF			Cer Trim
C164	T11	33	pF		5%	NPO Cer
C165	T11	2-25	pF			Cer Trim
C166	?	0.001	uF		20%	Z5U Cer
C167	T12	0.001	uF			FT
C168	T10	0.01	uF		20%	Z5U Cer
C169	T10	0.001	uF		20%	Z5U Cer
C170	T10	0.001	uF		20%	Z5U Cer
C171	T10	0.001	uF		20%	Z5U Cer
C172	T10	0.001	uF		20%	Z5U Cer
C173	T10	0.001	uF		20%	Z5U Cer
C174	T6	680	pF	500	5%	Dipped SM
C175	T5	0.001	uF		20%	Z5U Cer
C176	T11	0.01	uF		20%	Z5U Cer
C177	T2	20	pF		5%	NPO Cer
C178A	T6	0.005	uF		20%	Z5U Cer
C178B	T6	0.1	uF	12	20%	Z5U Cer
C179	T4	360	pF	500	5%	Dipped SM
C180	T11	0.005	uF		20%	Z5U Cer
C181	T11	0.005	uF		20%	Z5U Cer
C182	T2	180	pF		5%	N1500 DC
C183	T5	100	pF	500	5%	Dipped SM
C184	T5	68	pF		5%	NPO Cer
C185	T5	33	pF		5%	NPO Cer
C186	T5	6.8	pF		5%	NPO Cer
C187	T5	0.001	uF		20%	Z5U Cer
C188	T5	5	pF		5%	NPO Cer
C189	T11	12	pF		5%	NPO Cer
C190	T11	0.01	uF		20%	Z5U Cer
C191	T2	10	uF			Dipped Elec
C192	T2	0.01	uF		20%	Z5U Cer
C193	T12	100	pF	2k	5%	N150 Cer

 Copyright 2004 - K4OAH

ID	Photo Page	Part	V	W	Tol	Type
Q1	T2	2N5950				N-JFET RF
Q2	T2	2N5953				N-JFET RF
Q3	T2	2N5950				N-JFET RF
Q4	T2	2N4125				PNP Si GP
Q5	[PTO]	2N3563				NPN Si VHF/UHF
Q6	[PTO]	2N5950				N-JFET RF
Q7	T4	2N3394				NPN Si GP

ID	Photo Page	Part	V	W	Tol	Type
CR1	T2	1N4743A	13	1	5%	Zener Diode
CR2	T2	1N4148				Si FS Diode
CR3	T2	1N4148				Si FS Diode
CR4	T2	B5G5	600	1		Si Rectifier
CR5	[T14]	1N541				Ge Signal
CR6	[T14]	1N541				Ge Signal
CR7	[T14]	1N541				Ge Signal
CR8	[T14]	1N541				Ge Signal
CR9	T8	1N4148				Si FS Diode
CR10	T8	1N4148				Si FS Diode
CR11	T6	1N4148				Si FS Diode
CR12	T6	1N4148				Si FS Diode
CR13	T3	1N4148				Si FS Diode
CR14	T3	1N4148				Si FS Diode
CR15	T4	1N4148				Si FS Diode
CR16	T3	1N4148				Si FS Diode
CR17	T3	1N4148				Si FS Diode
CR18	[PTO]	1N714	10	0.5		Zener Diode
CR19	T11	B5G5				Si Rectifier
CR20	T6	1N4148				Si FS Diode
CR21	[PTO]	1N4148				Si FS Diode

 Copyright 2004 - K4OAH

ID	Photo Page	Value	Units			
L1	T8					
L2	T13					
L3	T12					
L4	T8					
L5	T8					
L6	T13					
L7	T13					
L8	T13					
L9	[INJ]					
L10	[PTO]					
L11	T12					
T1	T11					
T2						
T3						
T4						
T5						
T6						
T7	T12					
T8						
T9	T12					
T10	[PTO]					
T11	T11					
T12	T11					
T13						
T14	BAL MOD					
Y1	T2	5644.999	MHz			

 Copyright 2004 - K4OAH

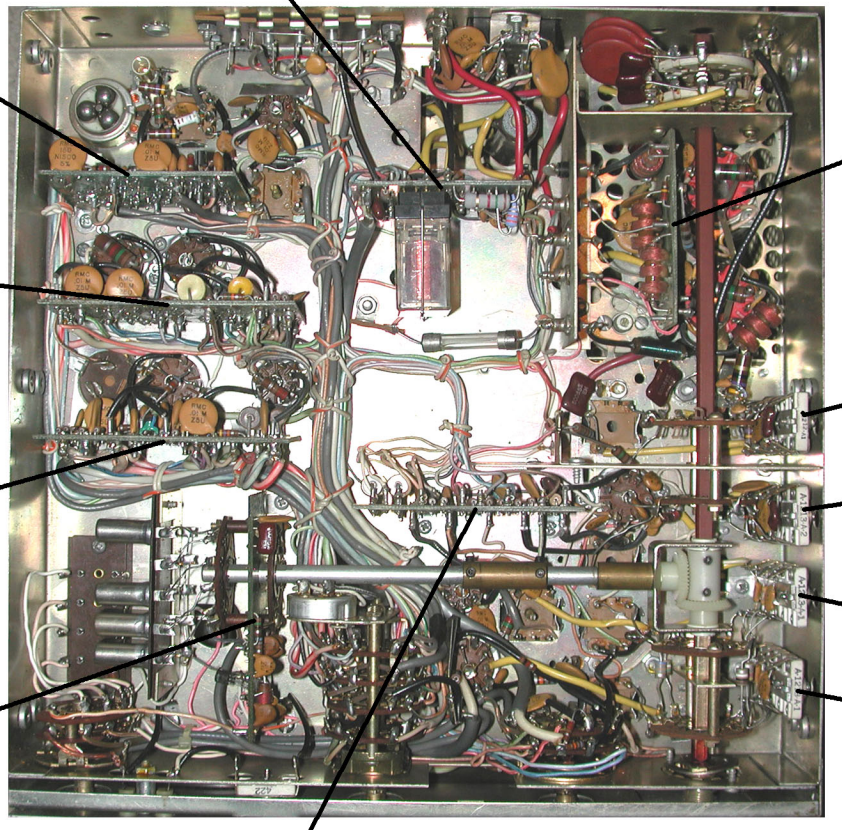

R L Drake T-4XC
Board Locator
Figure T1

© 2004 - K4OAH

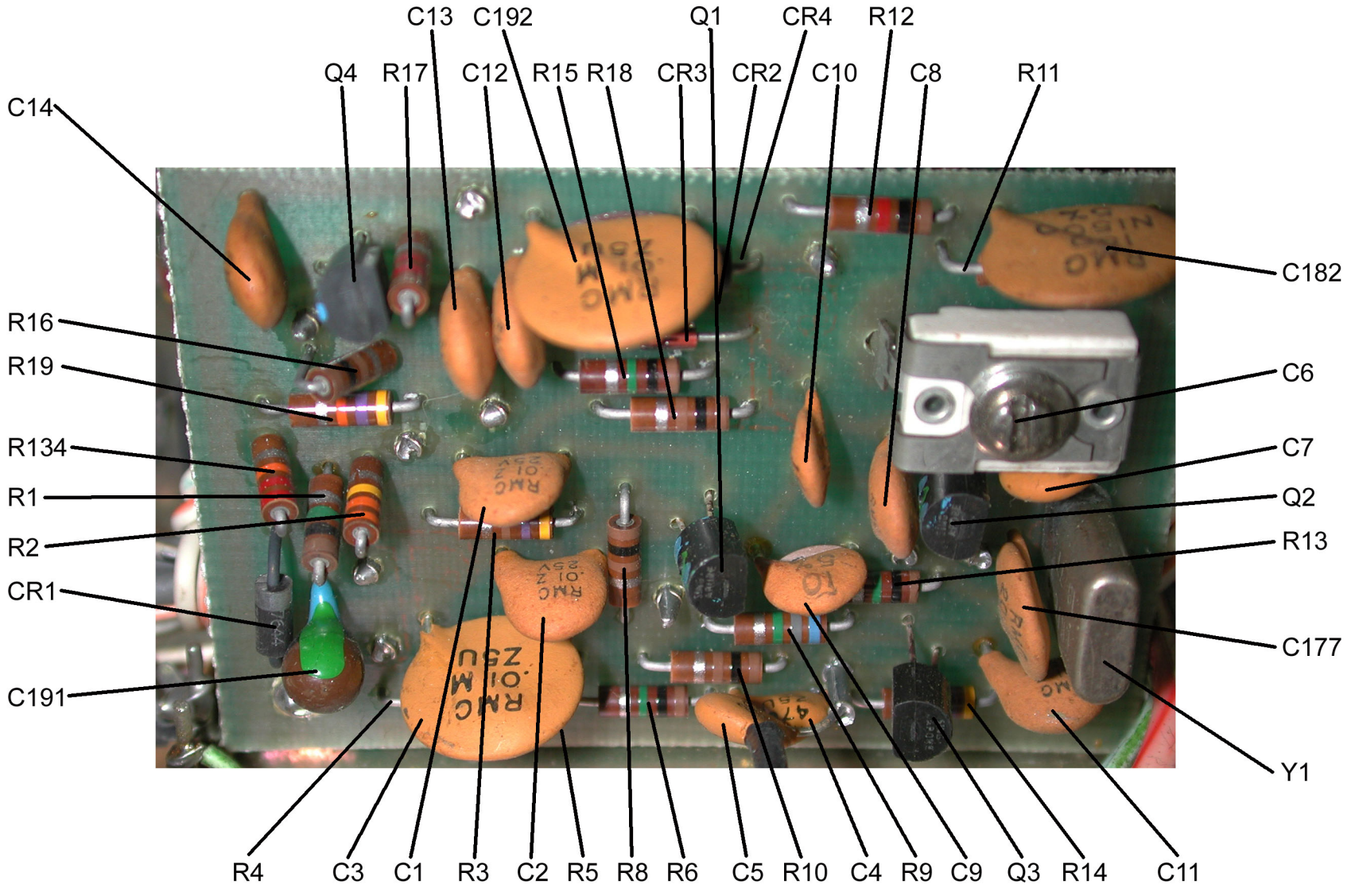

Carrier Osc., Buffers,
RTTY Switch

R L Drake T-4XC
Board 1
Figure T2

© 2004 - K4OAH

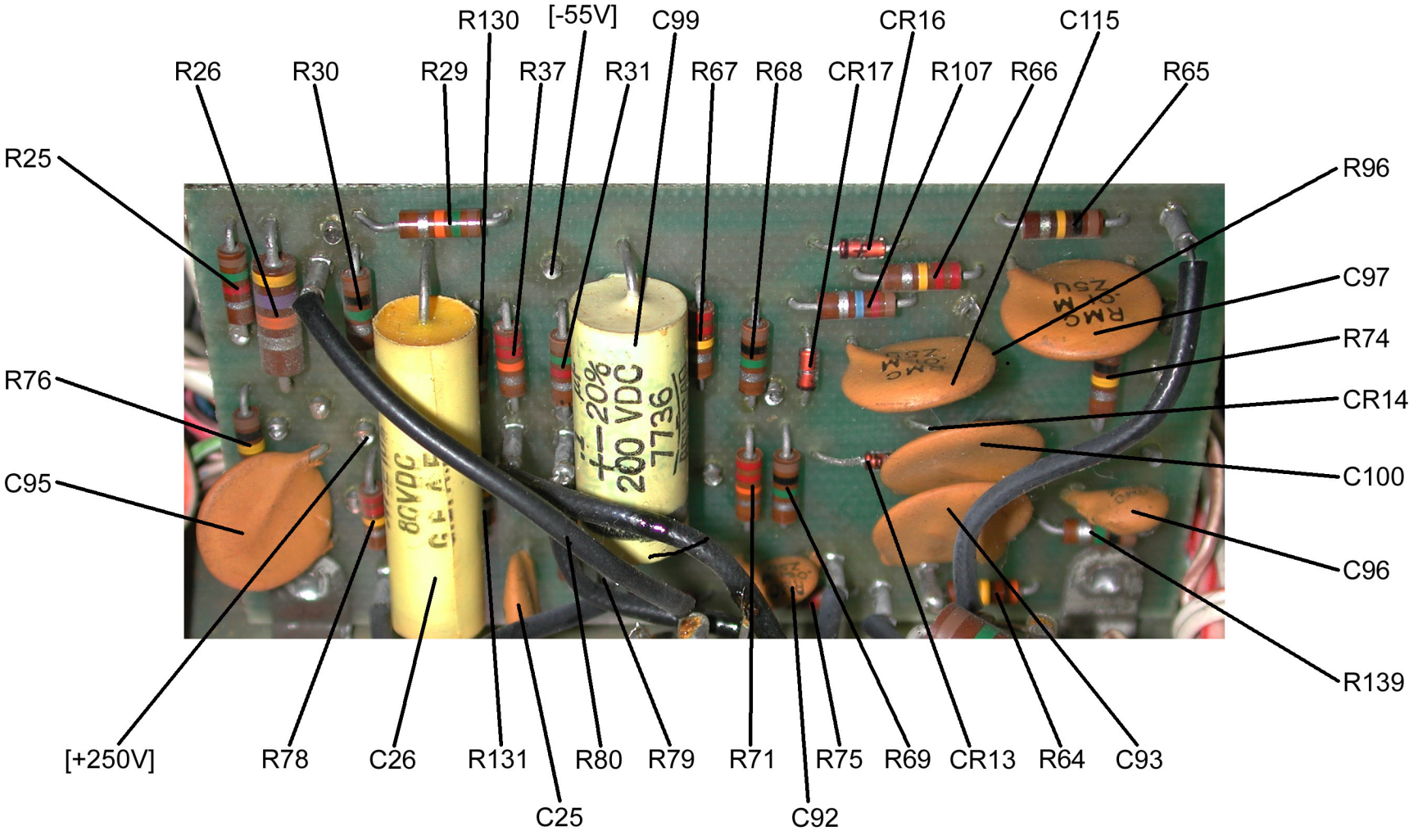

VOX Pre-amp, VOX Amp,
VOX Control, AGC Amp

R L Drake T-4XC
Board 2
Figure T3

© 2004 - K4OAH

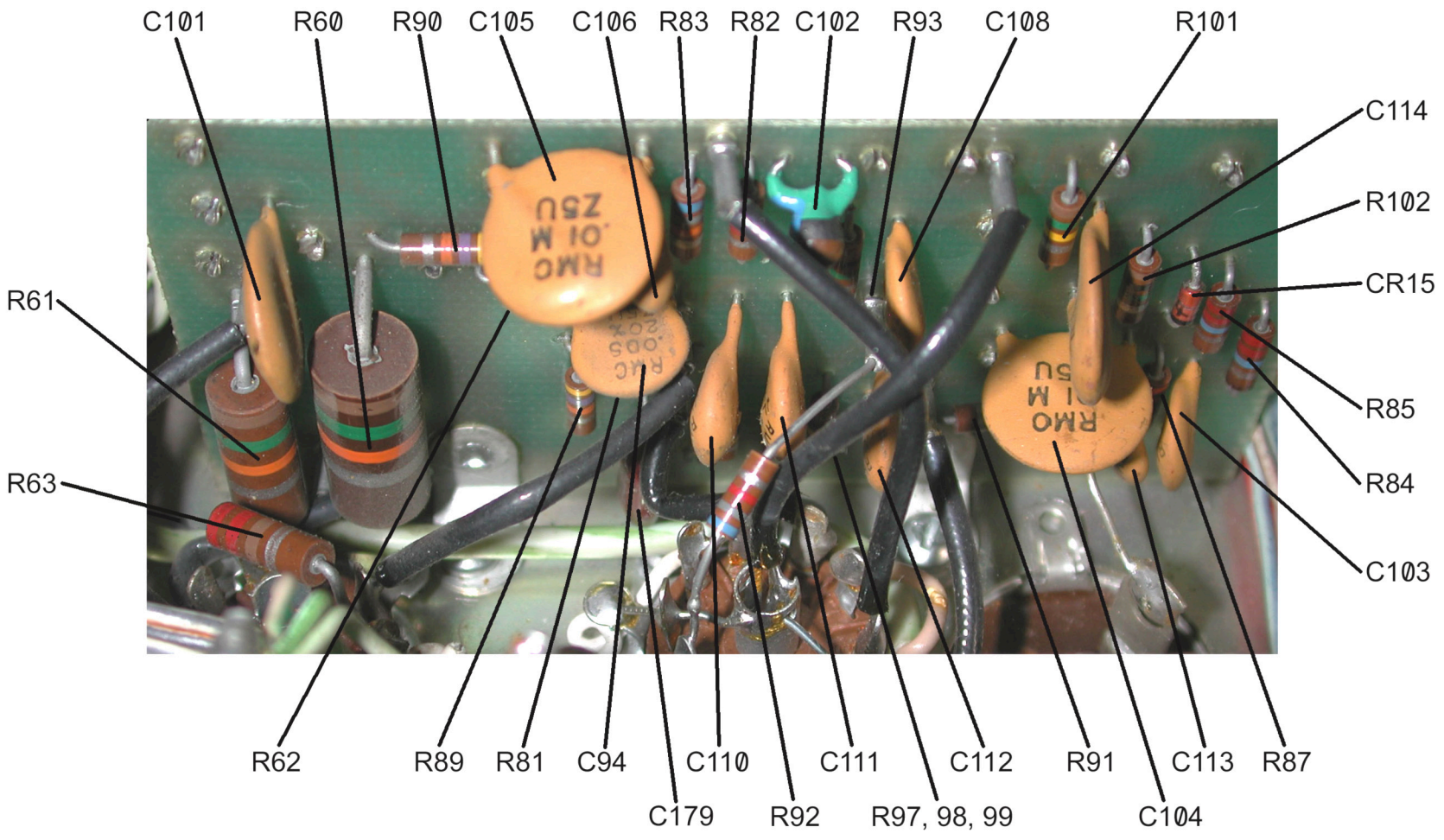

Mic Amp / Sidetone,
AM Modulator

R L Drake T-4XC
Board 3
Figure T4

© 2004 - K4OAH

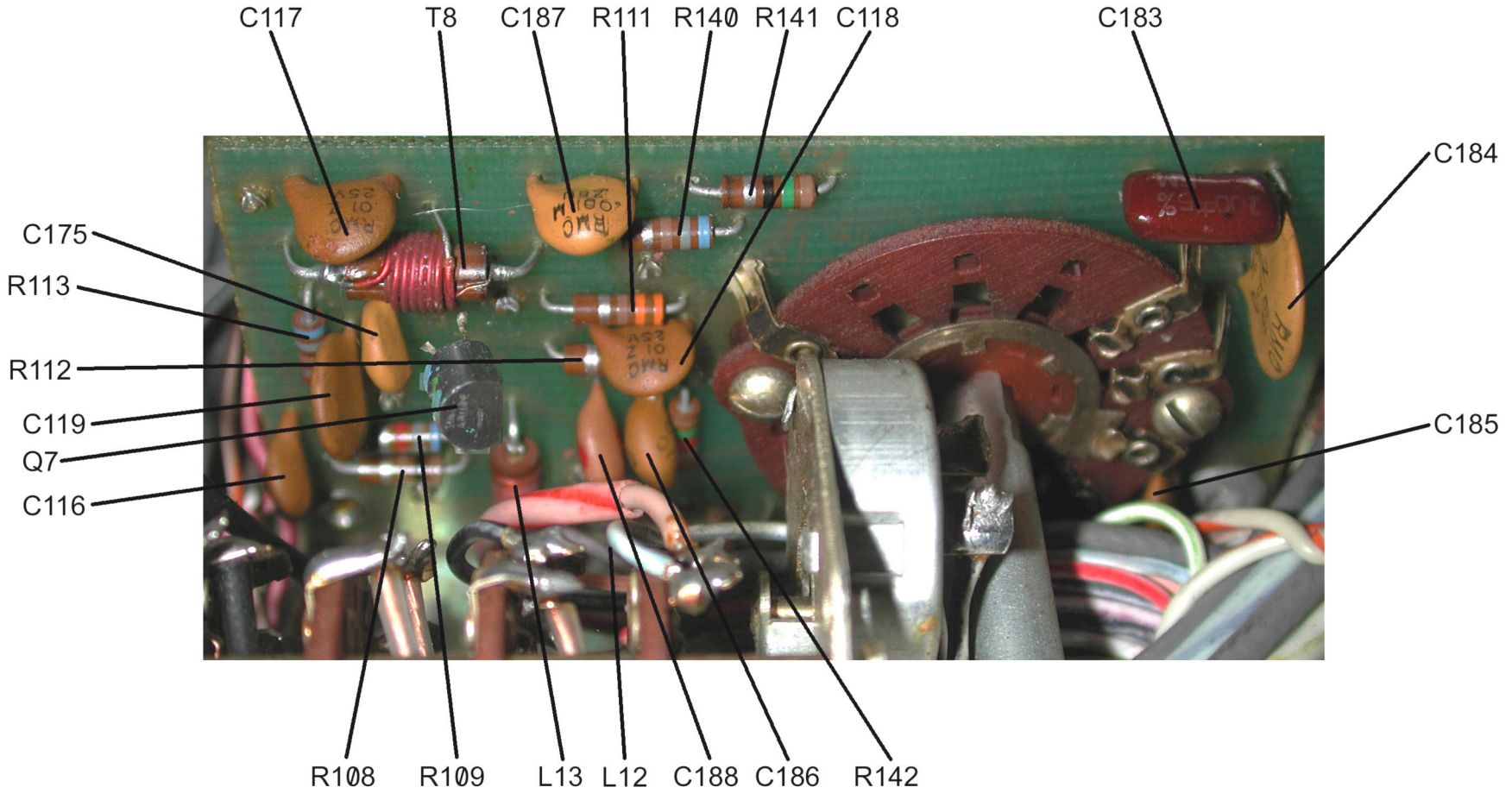

Band Oscillator

R L DRAKE T-4XC
Board 4
Figure T5

© 2004 - K4OAH

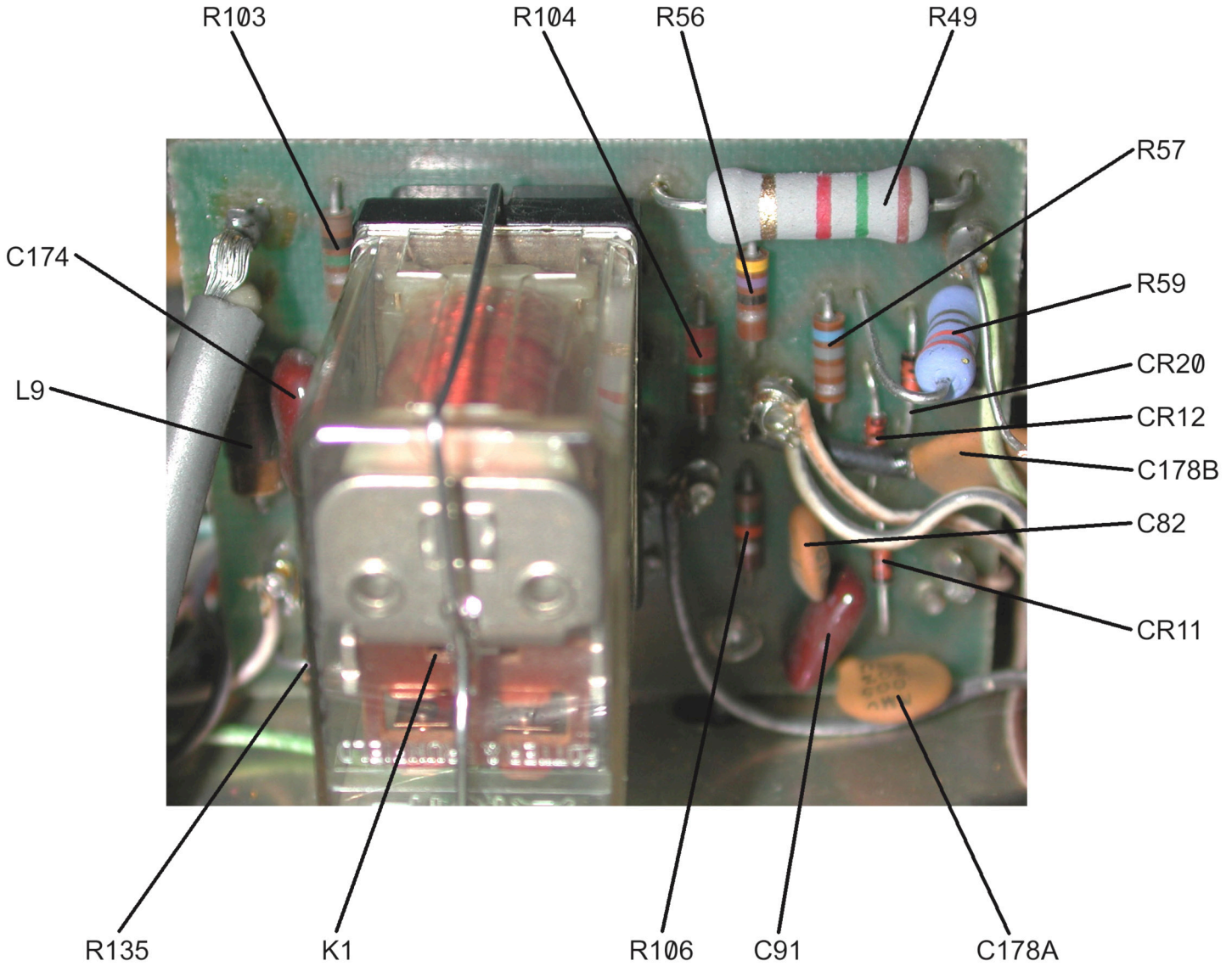

Metering & Relay

R L Drake T-4XC
Board 5
Figure T6

© 2004 - K4OAH

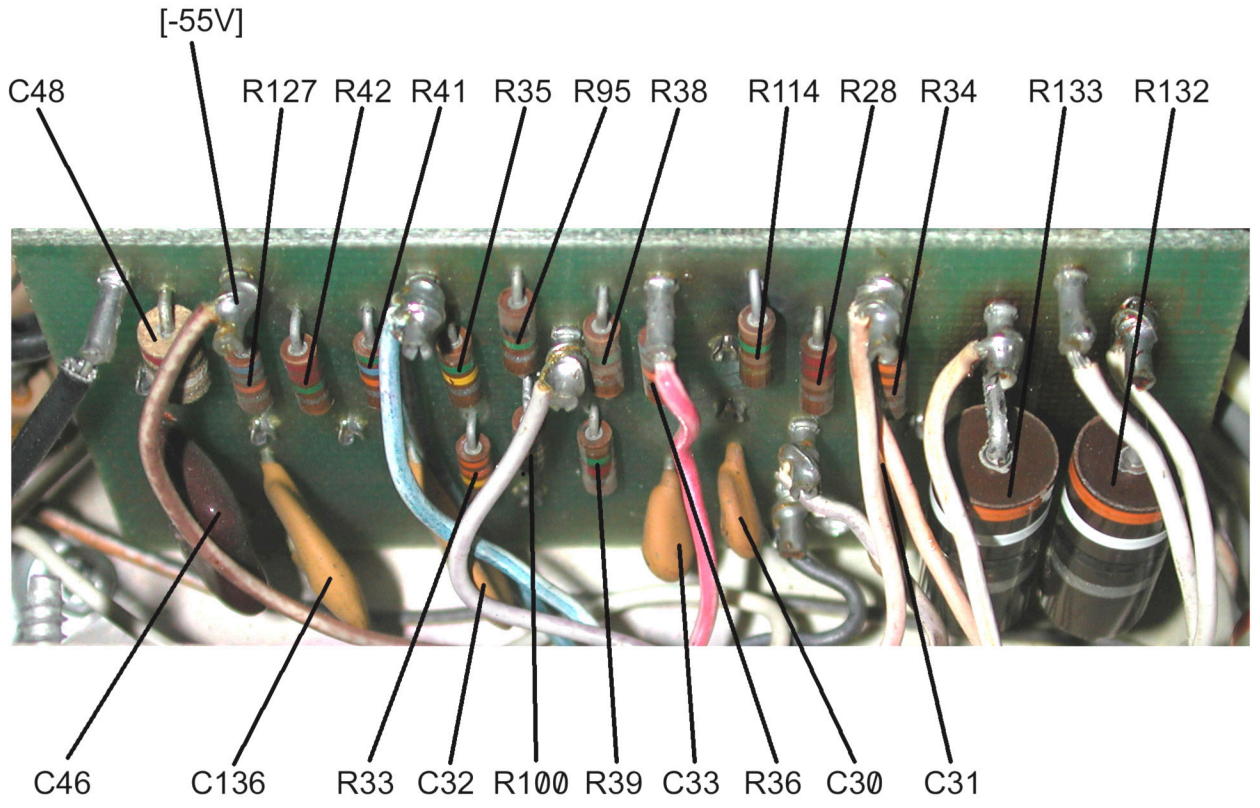

Decoupling & Keying
for IF & Mixer, Dial Lights

R L Drake T-4XC
Board 6
Figure T7

© 2004 - K4OAH

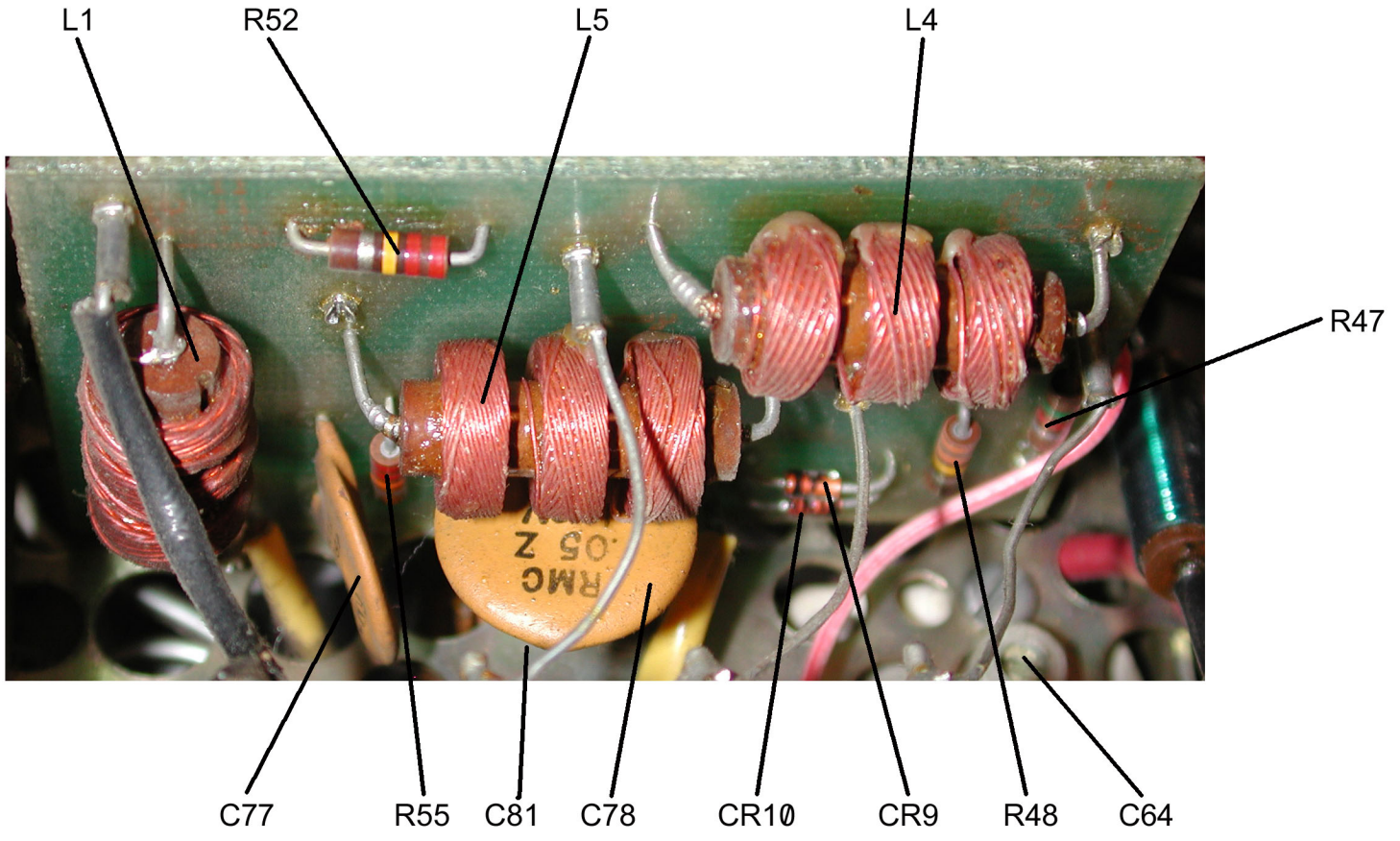

Final Plate, Screen & Cathode Decoupling, AGC, Neutralization Adjustment

R L Drake T-4XC
Board 7
Figure T8

© 2004 K4OAH

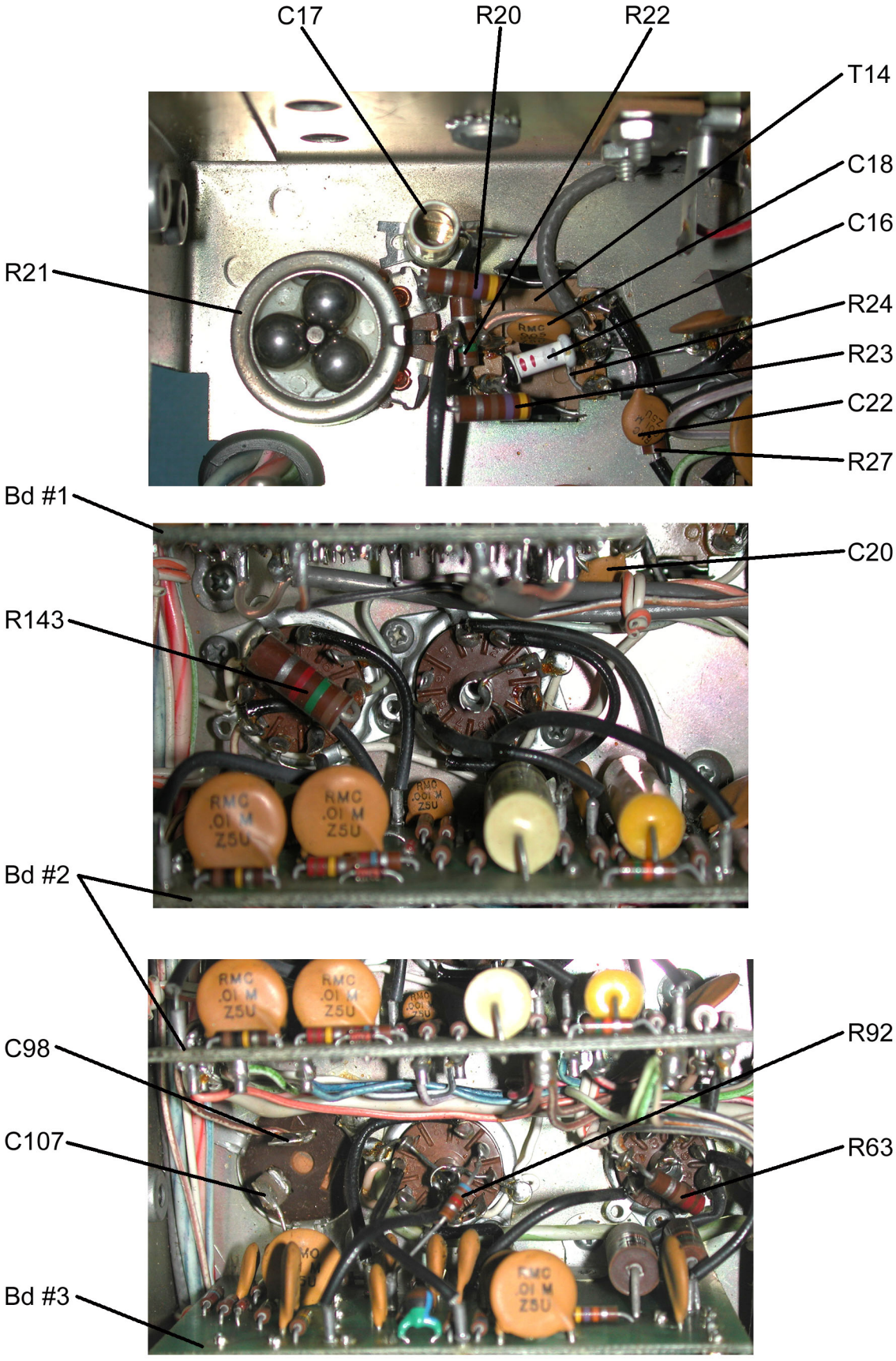

R L Drake T-4XC
Bottom Left Side
Figure T9

© 2004 - K4OAH

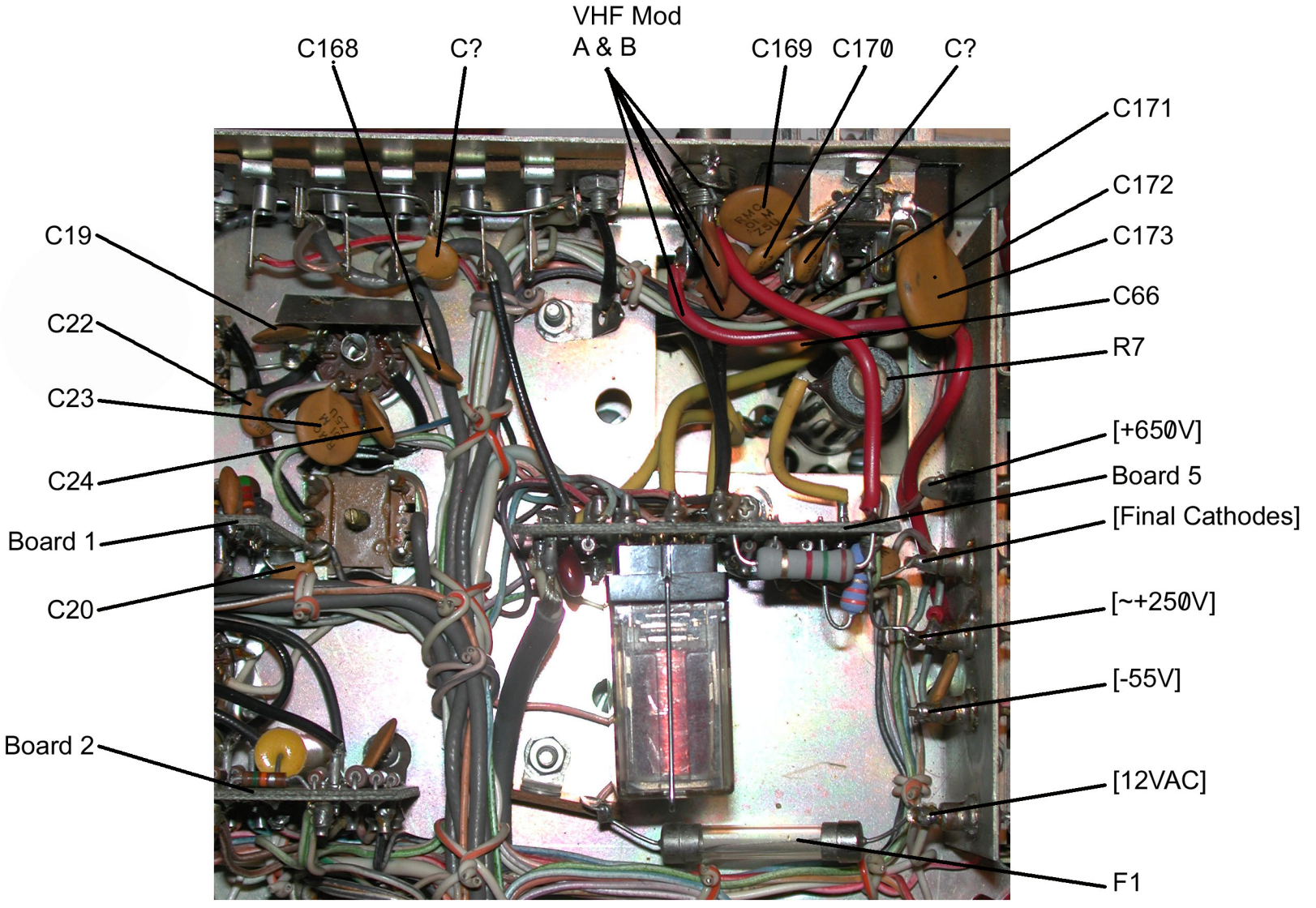

Mixer, Power
Connector

R L DRAKE T-4XC
Bottom Center
Figure T10

© 2004 - K4OAH

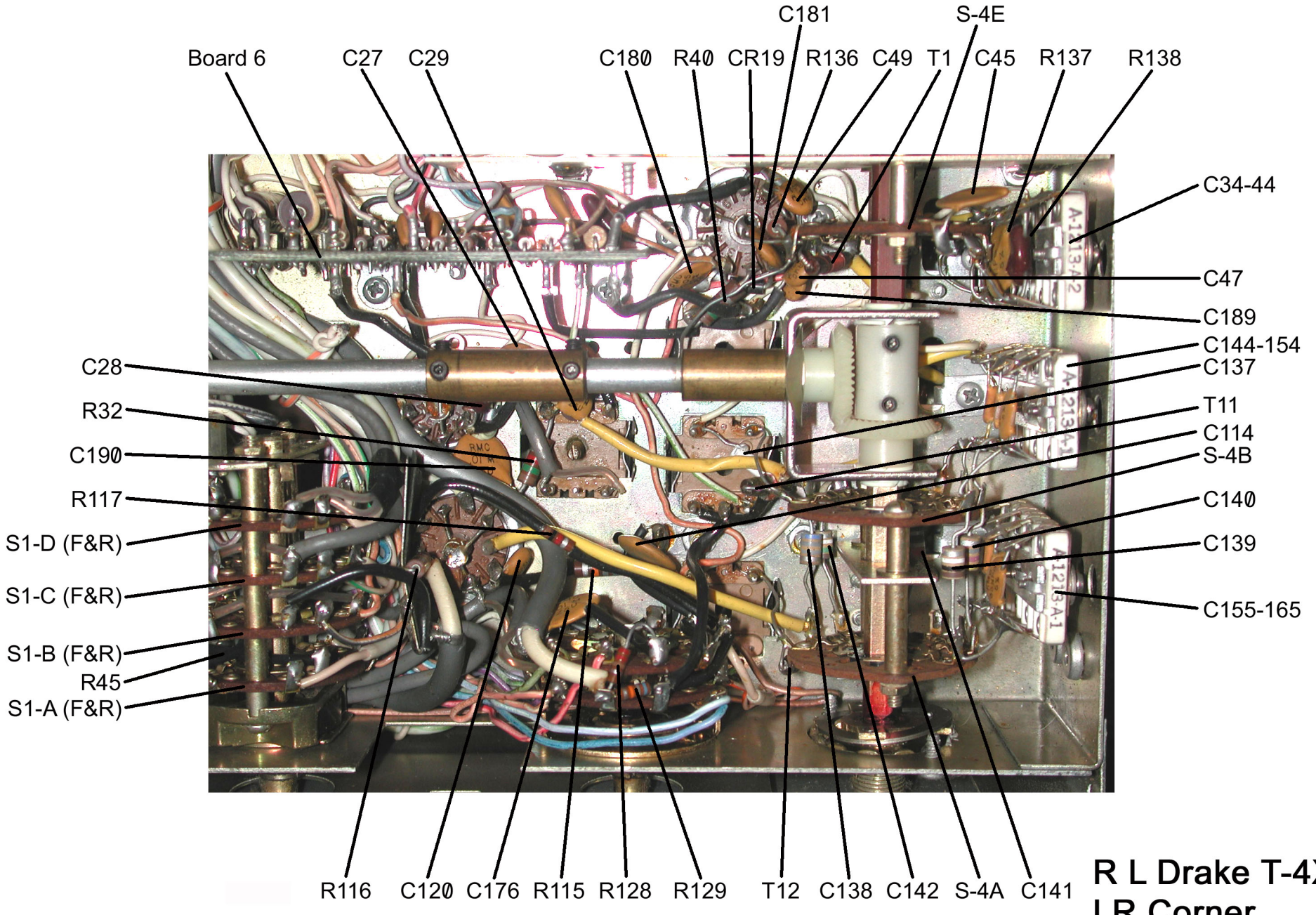

Mixer, Premixer,
Driver

R L Drake T-4XC
LR Corner
Figure T11

© 2004 - K4OAH

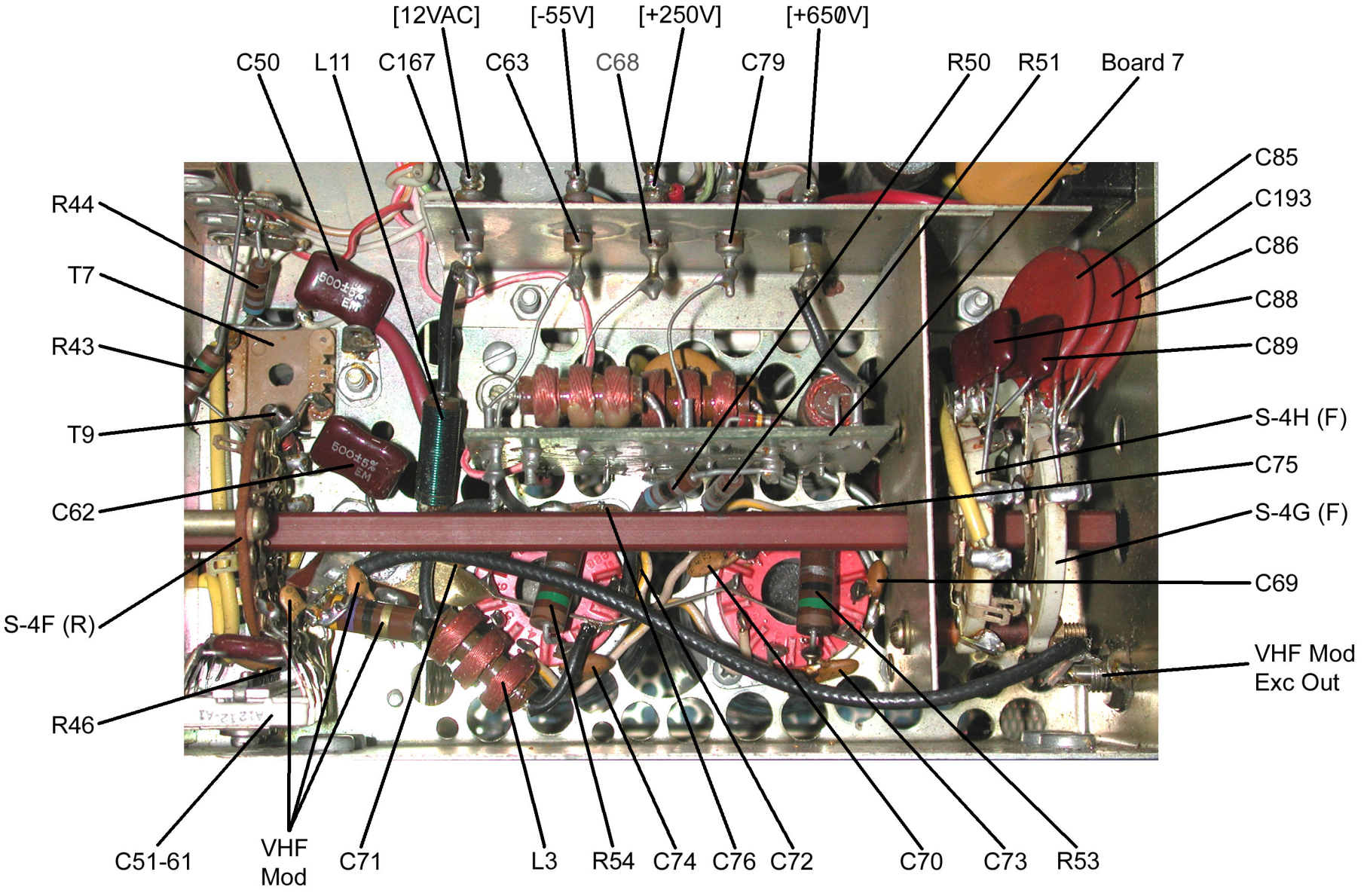

Driver Plate, Final Supply &
Final Loading

R L Drake T-4XC
PA Bottom
Figure T12

© 2004 - K4OAH

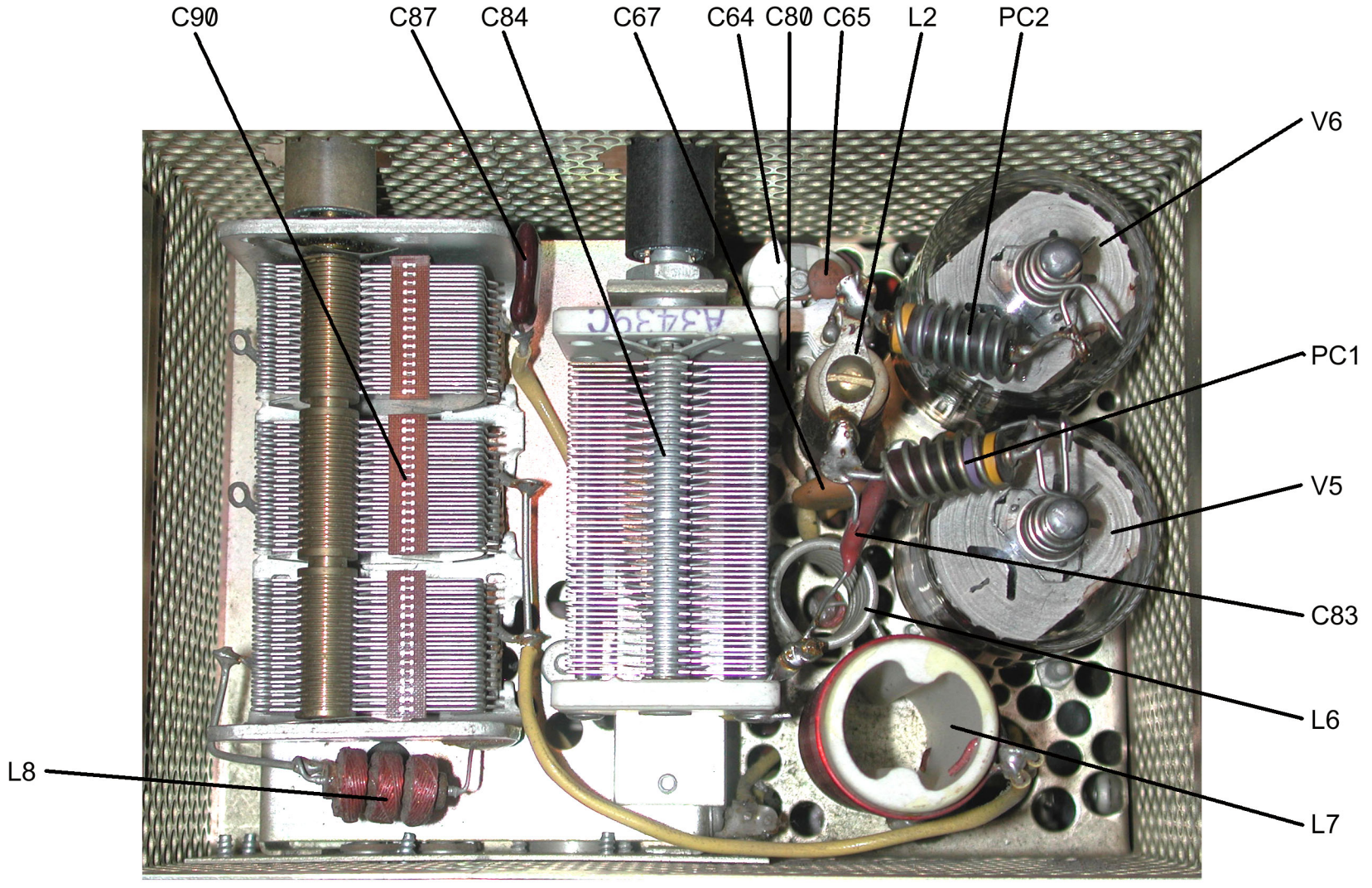

R L DRAKE T-4XC
PA Cage - Top
Figure T13

© 2004 - K4OAH