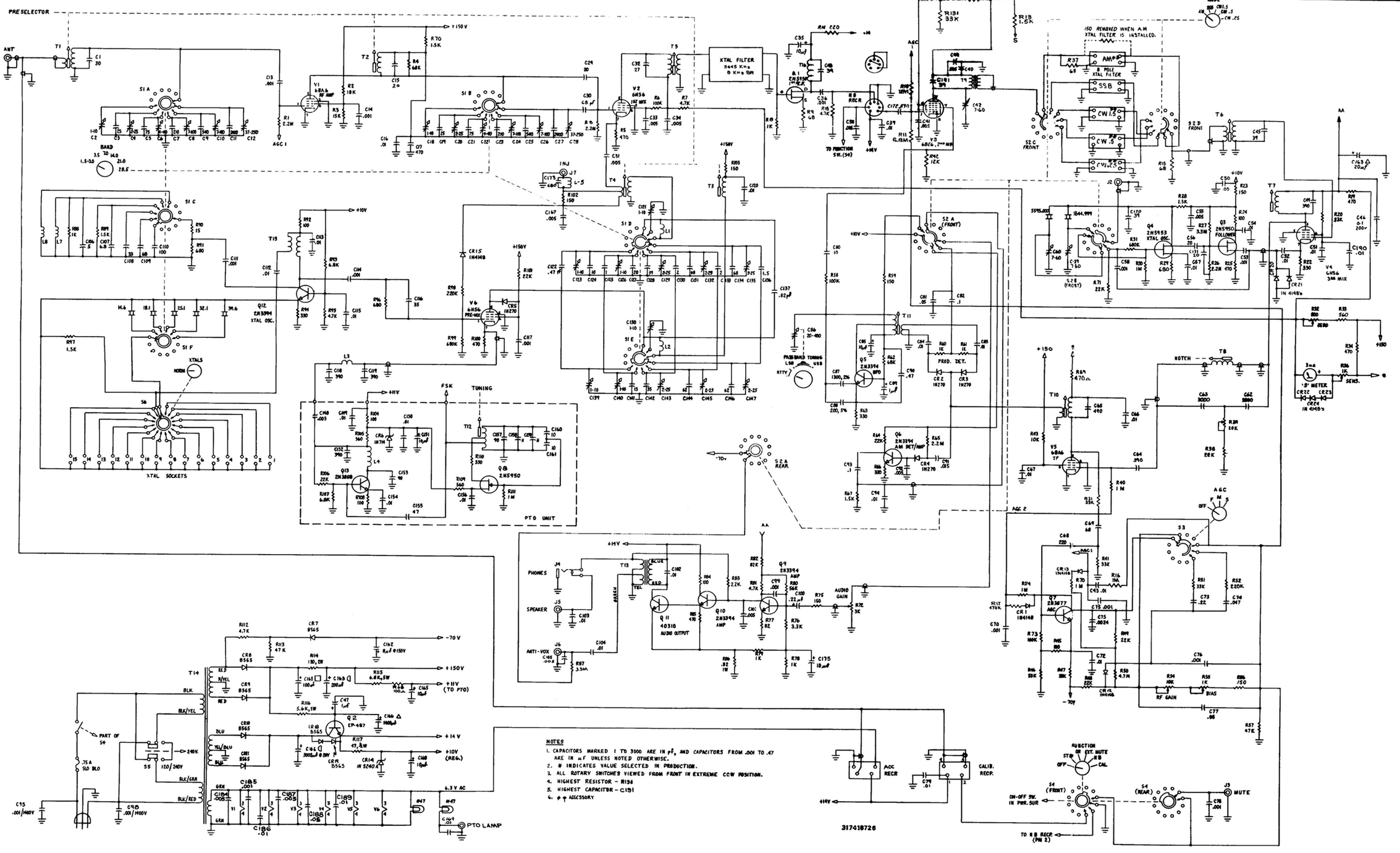

Figure 5–3. Schematic Daigram