DRAKE

INSTRUCTION MANUAL



MODEL **T-4XC**

TRANSMITTER

R. L. DRAKE COMPANY, MIAMISBURG, OHIO, U.S.A.



LIMITED WARRANTY

R. L. DRAKE COMPANY warrants to the original purchaser that this product shall be free from defects in material (except tubes and RF output transistors) or workmanship for ninety (90) days from the date of original purchase.

During the warranty period the R. L. DRAKE COMPANY or an authorized Drake service facility will provide free of charge both parts (except tubes and RF output transistors) and labor necessary to correct defects in material or workmanship.

To obtain such warranty service, the original purchaser must:

(1) Complete and send in the Warranty Registration Card.

(2) Notify R. L. DRAKE COMPANY or its nearest authorized service facility, as soon as possible after discovery of a possible defect, of:

(a) The model number and serial number, if any;

(b) The identity of the seller and the approximate date of purchase;

(c) A detailed description of the problem, including details on the electrical connection to associated equipment and the list of such equipment.

(3) Deliver the product to the R. L. DRAKE COMPANY or the nearest authorized service facility, or ship the same in its original container or equivalent, fully insured and shipping charges prepaid.

Correct maintenance, repair and use are important to obtain proper performance from this product. Therefore, carefully read the Instruction Manual. This warranty does not apply to any defect that R. L. DRAKE COMPANY determines is due to:

(1) Improper maintenance or repair, including the installation of parts or accessories that do not conform to the quality and specifications of the original parts.

(2) Misuse, abuse, neglect or improper installation.

(3) Accidental or intentional damage.

All implied warranties, if any, terminate ninety (90) days from the date of the original purchase.

The foregoing constitutes R. L. DRAKE COMPANY'S entire obligation with respect to this product, and the original purchaser and any user or owner shall have no other remedy and no claim for incidental or consequential damages. Some states do not allow limitations on how long an implied warranty lasts or do not allow the exclusion or limitation of incidental or consequential damages, so the above limitation and exclusion may not apply to you.

This warranty gives specific legal rights and you may also have other rights which vary from state to state.

R. L. DRAKE COMPANY
540 Richard Street • Miamisburg, Ohio 45342



PRINTED IN U.S.A.

TABLE OF CONTENTS

		Page
CHAPTER I	INTRODUCTION	1–1
1–1.	GENERAL DESCRIPTION	1–1
1–2.	MANUAL COVERAGE	1–1
	SPECIFICATIONS	1–3
CHAPTER II	INSTALLATION	2–1
2–1.	UNPACKING	2–1
2–2.	LOCATION	2–1
2–3.	POWER REQUIREMENTS	2–1
2–4.	ANTENNA REQUIREMENTS	2–1
2–5.	MICROPHONE REQUIREMENTS	2–1
2–6.	GROUND REQUIREMENTS	2–2
2–7.	RECEIVER MUTING	2–2
2–8.	RECEIVER ANTENNA SWITCHING	2–2
2–9.	ANTI VOX AND SIDETONE	2–2
2–10.	INJECTION	2–2
2–11.	R–4C CARRIER OSCILLATOR INJECTION	2–2
2–12.	R–4C PTO LAMP SWITCHING	2–2
2–13.	USING THE T–4XC WITH R–4 RECEIVER	2–2
2–14.	USING THE T–4XC WITH SPR–4 RECEIVER	2–3
2–15.	LINEAR AMPLIFIER CONNECTION	2–3
CHAPTER III	OPERATION	3–1
3–1.	GENERAL	3–1
3–2.	MAIN TUNING DIAL	3–1
3–3.	BIAS ADJUSTMENT	3–1
3–4.	TUNE UP ON DESIRED BAND	3–1
	FRONT PANEL CONTROLS	3–3
3–7.	DIAL CALIBRATION	3–5
3–8.	TRANSCEIVE ALIGNMENT FOR USE WITH R–4, R–4A AND R–4B ONLY	3–5
3–9.	CARRIER BALANCE ADJUSTMENT	3–5
3–10.	OPERATION IN VARIOUS MODES	3–5

TABLE OF CONTENTS (continued)

		Page
3–11.	VOX AND PTT	3–6
3–12.	CW OPERATION	3–7
3–13.	AM OPERATION	3–7
3–14.	SPOTTING	3–7
3–15.	TRANSCEIVING	3–7
3–16.	OPERATION ON ACCESSORY FREQUENCIES	3–9
3–17.	CRYSTAL CONTROLLED OPERATION	3–9
3–18.	CRYSTAL CONTROLLED SSB	3–9
3–19.	CRYSTAL CONTROLLED CW	3–9
3–20.	OPERATION WITH A LINEAR AMPLIFIER	3–11
3–21.	RTTY OPERATION	3–12
3–22.	PHONE PATCH CONNECTIONS	3–12
CHAPTER IV	THEORY OF OPERATION	4–1
4–1.	GENERAL	4–1
4–2.	SIDEBAND GENERATION AND RF CIRCUITS	4–1
4–3.	VOX CIRCUIT	4–1
4–4.	FREQUENCY CONTROLLING CIRCUITRY	4–1
4–5.	MISCELLANEOUS CIRCUITS	4–2
CHAPTER V	MAINTENANCE	5–1
5–1.	SERVICE DATA	5–1
5–2.	TOP COVER REMOVAL	5–1
5–3.	BOTTOM COVER REMOVAL	5–1
5–4.	TUBE REPLACEMENT	5–1
5–5.	TROUBLE SHOOTING	5–1
5–6.	TEST EQUIPMENT	5–2
5–7.	ALIGNMENT PROCEDURE	5–2
5–8.	RF AND MIXER STAGES	5–2
5–9.	CARRIER OSCILLATOR, FILTER MATCH AND BALANCED MODULATOR	5–3
5–10.	NEUTRALIZING FINAL AMPLIFIERS	5–3
5–11.	CRYSTAL OSCILLATOR CHECK	5–3
5–12.	VFO ADJUSTMENT	5–3

LIST OF ILLUSTRATIONS

Figure		Page
1–1.	T–4XC TRANSMITTER	1–2
2–1.	MICROPHONE CONNECTIONS	2–3
2–2.	REAR CHASSIS CONTROLS	2–3
2–3.	VIEWING ANGLE OPTIONS	2–6
2–4.	CONNECTING THE R–4C RECEIVER, AC–4 POWER SUPPLY AND MS–4 SPEAKER	2–6
2–5.	CONNECTING A LINEAR AMPLIFIER OTHER THAN L–4B	2–7
2–6.	CONNECTING A RECEIVER OTHER THAN THE R–4 SERIES	2–7
3–1.	FRONT PANEL CONTROLS	3–2
3–2.	RF TUNE CALIBRATION CURVES OF THE USEFUL RANGE FOR EACH BAND SWITCH POSITION	3–10
3–3.	FSK CIRCUIT	3–13
3–4.	AFSK CIRCUIT	3–13
4–1.	BLOCK DIAGRAM	4–3
5–1.	COMPONENT LOCATIONS, TOP VIEW	5–6
5–2.	COMPONENT LOCATIONS, BOTTOM VIEW	5–7
5–3.	RF AND INJECTION TRIMMERS	5–8
5–4.	SCHEMATIC DIAGRAM	5–9
5–5.	POWER SUPPLY SCHEMATIC DIAGRAMS	5–10

CHAPTER I
INTRODUCTION

1-1. GENERAL DESCRIPTION.

The T–4XC transmitter is a 200 Watt transmitter providing SSB, CW, and controlled carrier AM modes of operation. It can also be easily adapted for RTTY operation. The T–4XC can be used on most frequencies between 1.8 and 30 MHz. Crystals are supplied for full coverage of the 80, 40, 20, and 15 meter amateur bands and 28.5 – 29.0 MHz of the 10 meter band. Sockets are provided for accessory crystals to cover other 500 kHz wide segments.

A highly linear permeability-tuned solid state VFO and premixed injection give excellent stability and dial calibration on all bands. The frequency of the T–4XC may also be controlled by the R–4, R–4A, R–4B, or R–4C receiver to provide transceive operation if desired.

Included in the T–4XC are a CW sidetone oscillator, automatic transmit-receive switching, transmitting AGC, relative output indication, 8 pole crystal lattice filters for sideband selection, PTT and a flexible VOX system for SSB and AM among other features. Compact size and continuity of styling combine for eye appeal and convenience.

1-2. MANUAL COVERAGE.

This manual provides sufficient information for operation of the T–4XC Transmitter by a licensed operator and for repair and maintenance by an experienced electronics technician. Chapter II provides Installation instructions and illustrates interconnections with accessory equipment. Chapter III provides Operation instructions. Chapter IV presents Theory of Operation supplemented by a block diagram. Chapter V provides Maintenance instructions and parts ordering information supported by schematic diagrams, component location drawings, and voltage and resistance charts.



Figure 1–1. T–4XC Transmitter

SPECIFICATIONS

Frequency Coverage:	
Crystals Supplied:	3.5 to 4.0 MHz 7.0 to 7.5 MHz 14.0 to 14.5 MHz 21.0 to 21.5 MHz 28.5 to 29.0 MHz
Accessory Crystals:	4 additional 500 kHz ranges (see table 2–1). Between 1.8 and 30 MHz Excluding: 2.3 to 3.0 MHz 5.0 to 6.0 MHz 10.5 to 12.0 MHz
Fixed Freq. Crystal:	Between 1.8 and 30 MHz Excluding: 2.3 to 3.0 MHz 5.0 to 6.0 MHz 10.5 to 12.0 MHz
Dial Calibration:	Zero to 500 kHz in 1 kHz increments.
Calibration Accuracy:	Better than 1 kHz when calibrated to the nearest 100 kHz point.

Frequency Stability:	Drift is less than 100 Hz after warmup and less than 100 Hz with 10% change in line voltage.
Modes of Operation:	
SSB:	Upper or lower sideband on all bands. VOX or push-to-talk.
CW:	Grid-block keying. VOX circuit is keyed for automatic transmit receive switching. Sidetone oscillator is keyed for monitoring. Shifted carrier system has no spurious output.
AM:	Controlled carrier AM modulation is built-in. This system is compatible with SSB linear amplifiers. VOX or push-to-talk.
RTTY:	Two methods of RTTY are available. 1. The VFO is easily adaptable to FSK. Signal frequency shifts same direction on all bands and same amount on any band with a given dial setting. 2. The RTTY signal may also be generated by applying undistorted audio tones at the mike input in the SSB mode. A jack is provided at the rear panel to shift the carrier oscillator such that the frequency response of the transmitter on LSB is altered so as to pass the tone frequencies without generating unwanted harmonics or sidebands.
Sideband Suppression:	60 dB or better.
Carrier Suppression:	60 dB or better.
Average Distortion Products:	In excess of 30 dB down.
Frequency Response:	SSB, 325 to 2725 Hz at 6 dB down.
Input Power:	SSB and AM–200 Watts PEP, CW–200 Watts.
Output Impedance:	Nominal 52 Ohms adjustable with pi-network. (SWR should be 2:1 or less.)
Microphone Input:	High impedance.
AGC:	Operates on SSB to prevent flat-topping due to overdrive.
Power Requirements:	650 Volts at 225 mA average and 400 mA maximum with 10% regulation from 50 mA to 330 mA and maximum ripple of less than 1%. 250 Volts at 120 mA with 10% regulation from 82 mA to 120 mA. This includes the effect of the 650 Volt supply change if both voltages are obtained from the same transformer. Maximum ripple must be less than 1/4%. –45 to –65 Volts DC adjustable filtered bias into 33 K Ohm load. 12.6 Volts AC or DC at 3 amps.
Dimensions:	5-1/2" high, 10-3/4" wide, cabinet depth 11-5/8", overall length 12-1/4".
Weight:	14 lbs. 10 oz.

NOTES

CHAPTER II
INSTALLATION

2-1. UNPACKING.

Carefully remove the transmitter from the shipping carton, and examine it for evidence of damage. If any damage is discovered, immediately notify the transportation company that delivered the transmitter. Be sure to keep the shipping carton and packing material, as the transportation company will want to examine them if there is a damage claim. Keep the carton and packing material even if no shipping damage occurs. Having the original carton available makes packing the transmitter much easier should it ever be necessary to store it or return it to the factory for service.

NOTE

Fill out the enclosed registration card and return it to the factory immediately to insure registration and validation of the warranty.

Inspect the packing material closely before putting it away to be sure you have not overlooked the accessory hardware packed with the unit.

2-2. LOCATION.

In general, the location of the T–4XC is not critical. However, care should be taken to insure that space is provided around the unit to allow adequate air circulation. Extremely hot locations should be avoided. Do not cover the top of the unit with books, papers or pieces of equipment or overheating may result.

2-3. POWER REQUIREMENTS.

The T–4XC should be used with the R. L. Drake Model AC–4 Power Supply. This supply is designed to supply the proper voltages and currents for the unit from 120/240 VAC 50/60 cycles and will fit inside the MS–4 Speaker, used with your receiver. The T–4XC can also be operated from the R. L. Drake Model DC–4 Power Supply which operates from 12 volts DC. The DC–4 also supplies 120 volts AC to power the receiver.

CAUTION

Never attempt to operate the T–4XC without first connecting to an antenna or 52 Ohm dummy load of sufficient power handling capacity. Serious damage can result.

2-4. ANTENNA REQUIREMENTS.

The T–4XC is designed for use with antennas resonant on the operating frequency and having approximate impedances of from 30 to 100 Ohms. Although there are many types of antennas which will meet this requirement, the simplest is a one-half wave dipole, center feed with 52 Ohm coax. For a detailed discussion on antennas, we suggest you refer to the ARRL Antenna Book or The Radio Amateur's Handbook. Antenna connection to the T–4XC is provided at the SO–239 coax connector located on the rear of the unit (see figure 2-2).

2-5. MICROPHONE REQUIREMENTS.

A microphone with a wide and flat frequency response will enable you to obtain peak performance from your T–4XC. For good VOX (voice control) operation, it is desirable for the mike to have a cardioid pattern to reduce pickup from the back and sides. This enables you to operate with higher receiver audio gain, giving better VOX operation and reducing echoes, reverberation, and noise pickup. Microphones with limited low or high frequency response and with peaks in the voice range should be avoided. A 0.210 inch diameter, three conductor microphone plug is required. The microphone must be connected as shown in figure 2-1. for proper VOX and push-to-talk operation. Many microphones that are furnished with a switch are wired so that the microphone cartridge is open or short circuited un-

less the switch is depressed. This function must be defeated or VOX operation will be impossible.

2-6. GROUND REQUIREMENTS.

For best results, the T–4XC should be attached to a good earth ground through as short and as heavy a piece of ground braid as possible. A binding post is provided on the rear of the chassis for this purpose (see figure 2-2).

2-7. RECEIVER MUTING.

The RCVR MUTE jack provides a short circuit to ground on receive, and an open circuit on transmit. This jack can be connected directly to the Mute jack on the R–4, R–4A, R–4B or R–4C Receiver with one of the cables provided.

2-8. RECEIVER ANTENNA SWITCHING.

The T–4XC contains built-in receiver antenna switching. Simply connect one of the coax cables provided from the RCVR ANT jack on the rear of the T–4XC chassis to the receiver antenna terminals.

2-9. ANTI VOX AND SIDETONE.

The Anti Vox input and CW sidetone output utilizes the ANTI VOX jack on the rear of the T–4XC chassis for connecting to the receiver and speaker. The impedance at this point is approximately 5000 Ohms. To connect to the R–4, R–4A, R–4B or R–4C Receiver, simply couple the ANTI VOX jack to the ANTI VOX jack on the rear of the receiver chassis with one of the cables provided. If the R–4, R–4A, R–4B or R–4C is not used, it will be necessary to use a 5000 Ohm to 4 Ohm audio output transformer between the ANTI VOX jack and the speaker terminal of the receiver. The high impedance winding of the transformer should be connected to the ANTI VOX jack and the low impedance winding should be connected to the receiver speaker terminals in parallel with the speaker. An alternate connection for this jack would be to the plate of the receiver audio output tube. A DC blocking capacitor must be provided in the receiver.

2-10. INJECTION.

Refer to figure 2-4. In order to transceive with the R–4, R–4A, R–4B or R–4C Receiver, run a cable from the INJ jack on the rear of the T–4XC chassis to the INJ jack on the top of the R–4 or on the back of the R–4A, R–4B or R–4C chassis. This cable will provide both RF and control voltage. Be sure to use one of the low capacity injection cables for this connection.

2-11. R–4C CARRIER OSCILLATOR INJECTION.

The 5.645 MHz oscillator injection in the R–4C can be supplied from the T–4XC by connecting a cable between the Carrier Oscillator jacks of the two units. This phase-locks the two units to the same frequency on SSB when the TRANSCEIVE switch is in the Receive or Transmit position. No connection is made to this jack when using the R–4, R–4A or R–4B. Be sure to use one of the low capacity injection cables for this connection.

2-12. R–4C PTO LAMP SWITCHING.

Refer to figure 2-4. The Permeability Tuned Oscillator (PTO) pilot light in the R–4C is controlled by the TRANSCEIVE switch in the T–4XC when a cable is connected between the PTO lamp jacks on the two units. When this connection is made, the receiver PTO lamp will be on when the receiver PTO is controlling the frequency on receive and transmit. The transmitter PTO lamp will be on when the transmitter PTO is controlling frequency in both receive and transmit and both PTO lamps will light when independent frequency control is used. No connection is made to the PTO lamp jack when using the R–4, R–4A or R–4B.

2-13. USING THE T–4XC WITH R–4 RECEIVER.

When the T–4XC is used with the R–4 Receiver, one change must be made in the R–4 for proper transceive operation. Change R71, a 150 K resistor, (from pin 1 of the 6AU6 VFO tube V11), to a 330 K. This will not affect the operation of the receiver in any other way. NOTE: This does not apply to R–4A, R–4B or R–4C Receivers.

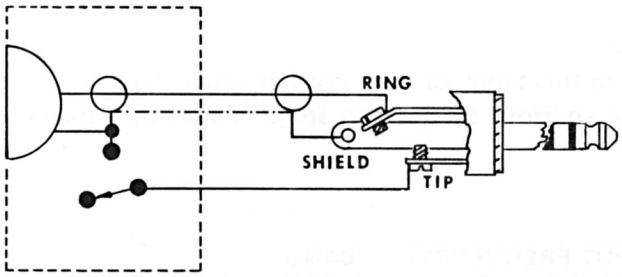

Figure 2–1. Microphone Connections

2-14. USING THE T–4XC WITH SPR–4 RECEIVER.

When the T–4XC is used with the SPR–4 Receiver with a TA–4 Transceive Adapter board installed, two resistors must be added to the SPR–4. Add an 8.2 K resistor from the 12 volt B+ line to the MUTE jack. Add a 2.2 meg resistor on the back of the TA–4 board in parallel with R3, a 1 meg resistor.

2-15. LINEAR AMPLIFIER CONNECTION.

In order to use your T–4XC with a linear amplifier, connect as illustrated in figure 2-5. Note that if the linear amplifier has negative-going transmitting AGC voltage available, it can be connected to pin 3 of the power connector, connection available at jack on AC–4, to prevent the linear from being overdriven by the T–4XC. For connections to the Drake L–4 or L–4B Linear Amplifier, see the L–4 or L–4B instruction manual.

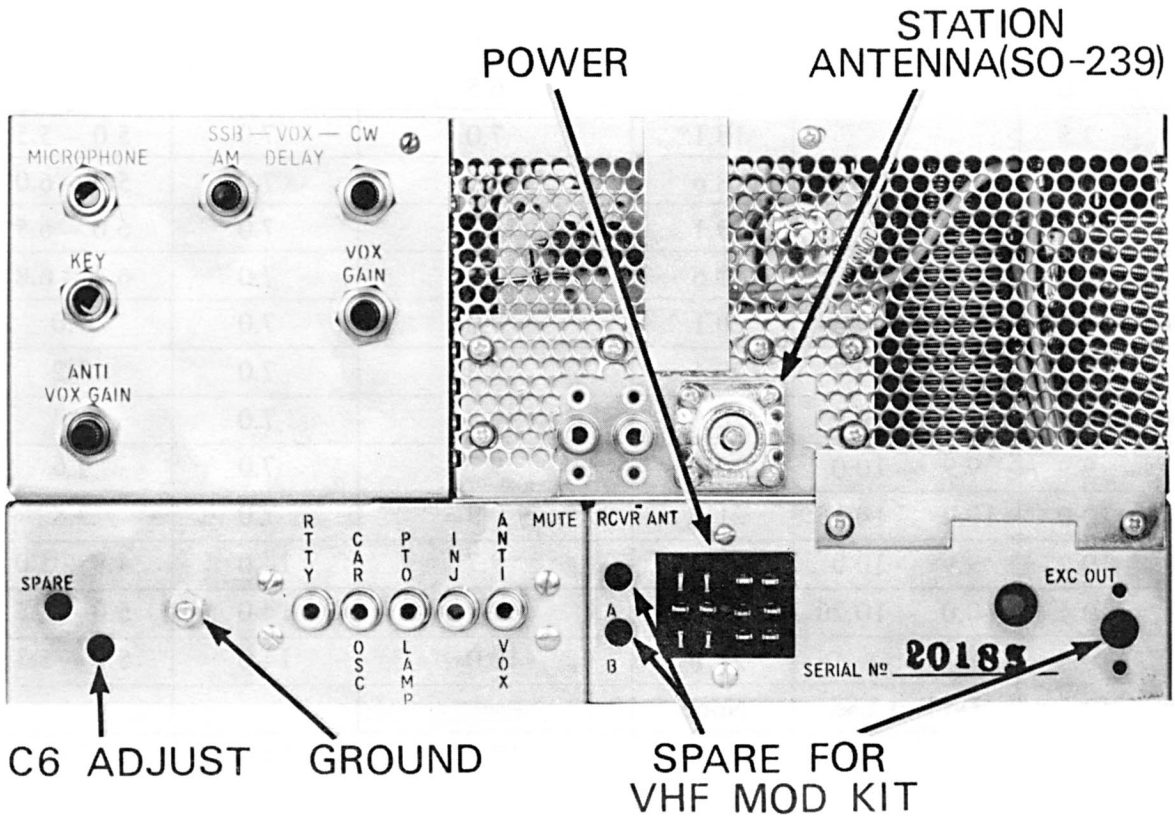

Figure 2–2. Rear Chassis Controls

Table 2–1. Crystal Frequency Chart

CAUTION

Use of the T–4C or T–4XC on frequencies not shown in this table, or with crystals other than those shown for a particular frequency, may result in illegal spurious outputs on frequencies other than intended and should be avoided.

USABLE FREQUENCY	DO NOT USE BETWEEN	CRYSTAL	OUTPUT FREQUENCY EQUALS DIAL PLUS	BAND SWITCH	RF TUNE
1.8 – 2.0	1.5 – 1.8	12.6	1.5	1.8 – 3.0	0.0 – 2.0
1.8 – 2.3		12.9	1.8	1.8 – 3.0	0.0 – 4.0
2.3 – 3.0	Do Not Use	None			
3.0 – 3.5		14.1	3.0	3.5	0.0 – 2.0
3.5 – 4.0		14.6*	3.5	3.5	2.0 – 4.0
4.0 – 4.35	4.35 – 4.50	15.1	4.0	3.5	3.5 – 4.5
4.3 – 4.6	4.6 – 4.7	15.4	4.3	3.5	4.0 – 5.0
4.5 – 4.7	4.7 – 4.8	15.6	4.5	3.5	4.5 – 5.0
4.7 – 4.8	4.6 – 4.7	15.4	4.3	3.5	5.0 – 5.5
4.8 – 5.0	4.7 – 4.8	15.6	4.5	3.5	5.0 – 5.5
5.0 – 6.0	Do Not Use	None			
6.0 – 6.5		17.1	6.0	7.0	3.9 – 4.5
6.5 – 7.0		17.6	6.5	7.0	4.0 – 5.0
7.0 – 7.5		18.1*	7.0	7.0	5.0 – 5.5
7.5 – 8.0		18.6	7.5	7.0	5.5 – 6.0
8.0 – 8.5		19.1	8.0	7.0	6.0 – 6.5
8.5 – 9.0		19.6	8.5	7.0	6.4 – 6.8
9.0 – 9.35	9.35 – 9.5	20.1	9.0	7.0	7.0
9.3 – 9.55	9.55 – 9.7	20.4	9.3	7.0	7.2
9.5 – 9.75	9.75 – 9.9	20.6	9.5	7.0	7.4
9.7 – 9.9	9.9 – 10.0	20.8	9.7	7.0	7.6
9.9 – 10.0	10.0 – 10.15	21.0	9.9	7.0	7.8
10.0 – 10.2	9.9 – 10.0	20.8	9.7	14.0	4.8 – 5.0
10.2 – 10.4	10.0 – 10.20	21.0	9.9	14.0	5.0 – 5.3
10.25 – 10.5		21.1	10.0	14.0	5.0 – 5.3
10.5 – 12.0	Do Not Use	None			
12.0 – 12.5		23.1	12.0	14.0	6.6
12.5 – 13.0		23.6	12.5	14.0	6.7
13.0 – 13.5		24.1	13.0	14.0	6.8
13.5 – 14.0		24.6	13.5	14.0	7.0 – 7.2
14.0 – 14.5		25.1*	14.0	14.0	7.2 – 7.5

Table 2–1. Crystal Frequency Chart (continued)

USABLE FREQUENCY	DO NOT USE BETWEEN	CRYSTAL	OUTPUT FREQUENCY EQUALS DIAL PLUS	BAND SWITCH	RF TUNE
14.5 – 15.0		25.6	14.5	14.0	7.5 – 7.8
15.0 – 15.5		26.1	15.0	14.0	7.8 – 8.0
15.5 – 16.0		26.6	15.5	14.0	8.0
16.0 – 16.5		27.1	16.0	21.0	7.0
16.5 – 17.0		27.6	16.5	21.0	7.2
17.0 – 17.5		28.1	17.0	21.0	7.4
17.5 – 18.0		28.6	17.5	21.0	7.6
18.0 – 18.5		29.1	18.0	21.0	7.7
18.5 – 19.0		29.6	18.5	21.0	7.8
19.0 – 19.5		30.1	19.0	21.0	8.0
19.5 – 20.0		30.6	19.5	21.0	8.1
20.0 – 20.5		31.1	20.0	21.0	8.3
20.5 – 21.0		31.6	20.5	21.0	8.5
21.0 – 21.5		32.1*	21.0	21.0	8.6
21.5 – 22.0		32.6	21.5	21.0	8.8
22.0 – 22.5		33.1	22.0	21.0	9.0
22.5 – 23.0		33.6	22.5	21.0	9.0
23.0 – 23.5		34.1	23.0	28.5	8.0
23.5 – 24.0		34.6	23.5	28.5	8.2
24.0 – 24.5		35.1	24.0	28.5	8.4
24.5 – 25.0		35.6	24.5	28.5	8.5
25.0 – 25.5		36.1	25.0	28.5	8.5
25.5 – 26.0		36.6	25.5	28.5	8.6
26.0 – 26.5		37.1	26.0	28.5	8.8
26.5 – 27.0		37.6	26.5	28.5	9.0
27.0 – 27.5		38.1	27.0	28.5	9.2
27.5 – 28.0		38.6	27.5	28.5	9.2
28.0 – 28.5		39.1	28.0	28.5	9.4
28.5 – 29.0		39.6*	28.5	28.5	9.5
29.0 – 29.5		40.1	29.0	28.5	9.8
29.5 – 30.0		40.6	29.5	28.5	10.0

**Supplied with unit.*

NOTE:
Crystals can be obtained from the R. L. DRAKE COMPANY. When ordering please be sure to specify that the crystal you are ordering is for the T–4XC. R–4A, R–4B, R–4C, T–4X, T–4XB and T–4XC crystals operate in the series mode and are interchangeable.

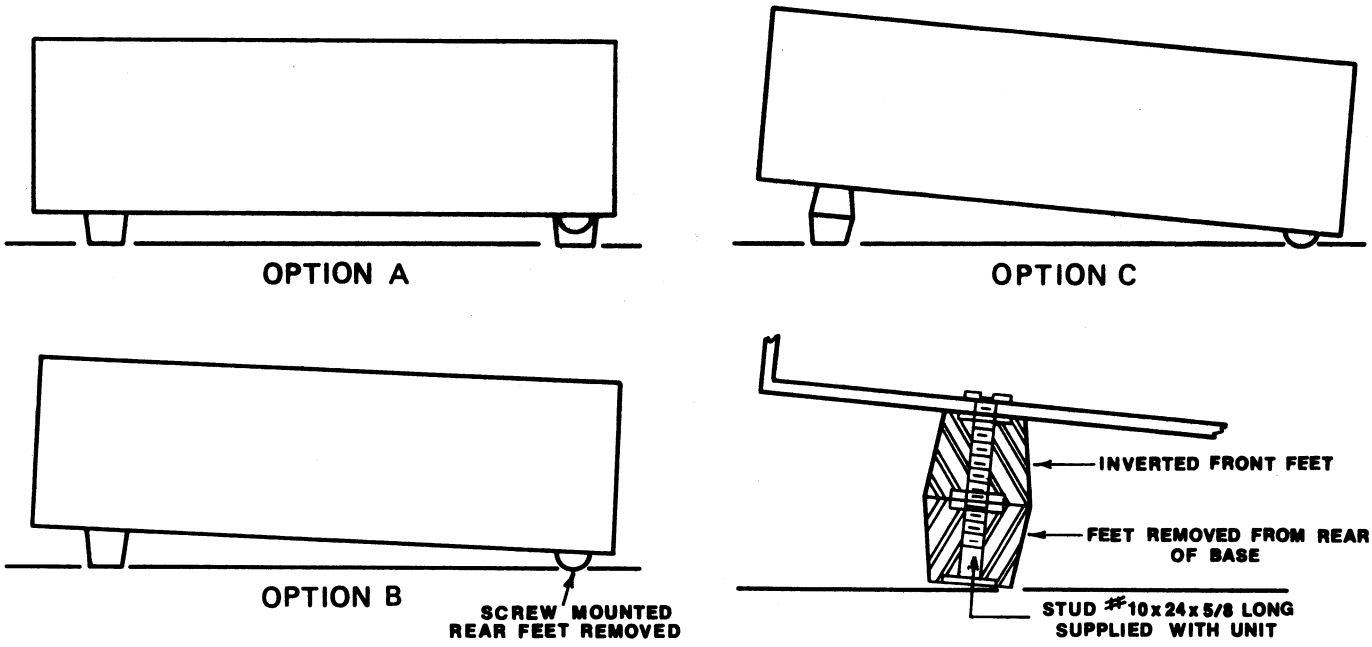

Figure 2–3. Viewing Angle Options

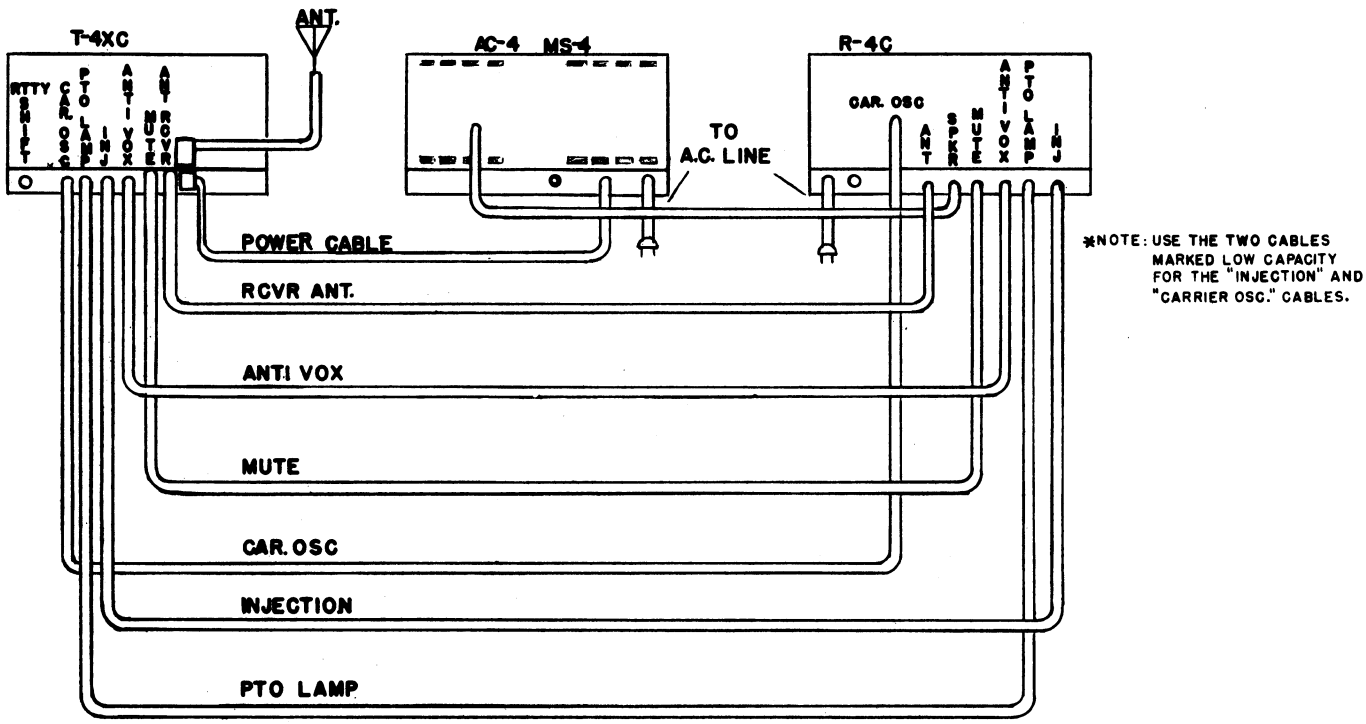

Figure 2–4. Connecting the R–4C Receiver, AC–4 Power Supply and MS–4 Speaker

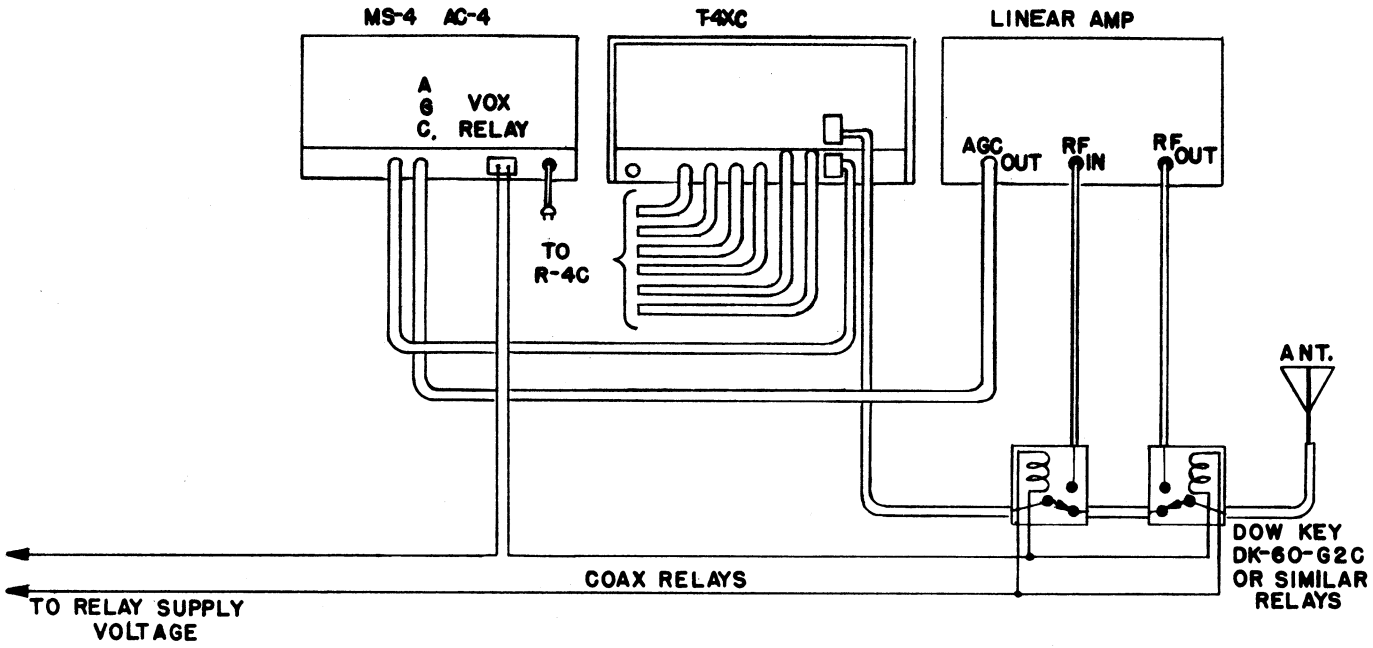

Figure 2–5. Connecting a Linear Amplifier, other than L–4B

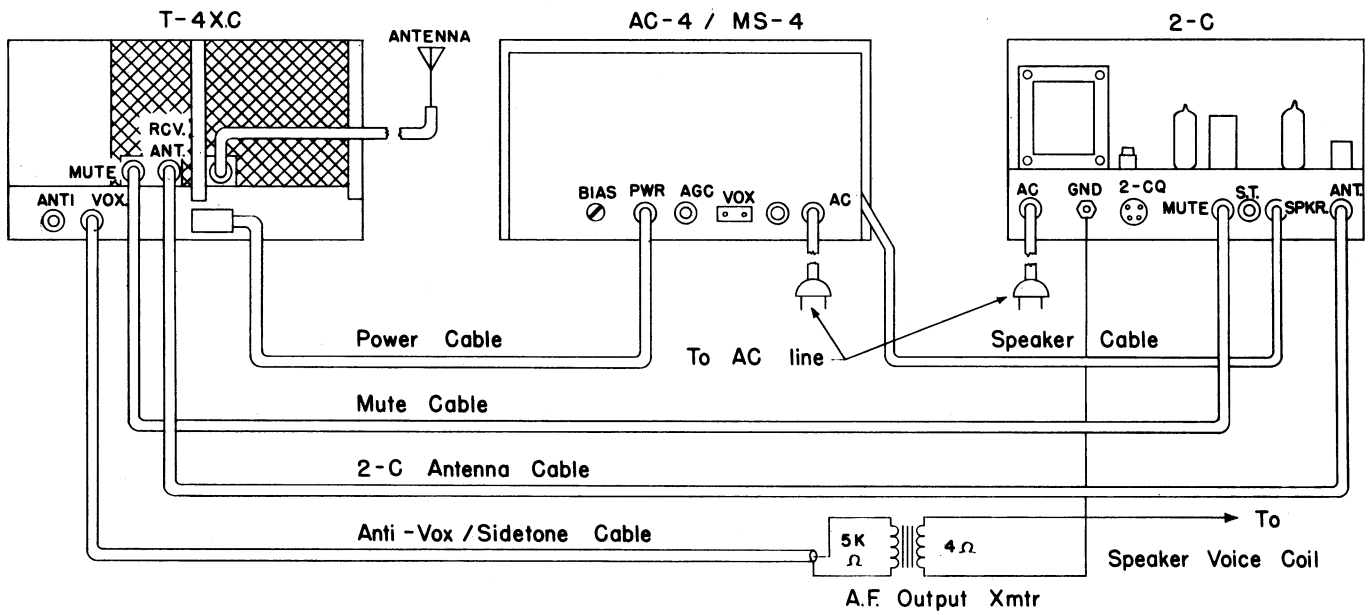

Figure 2–6. Connecting a Receiver other than the R–4 Series

NOTES

CHAPTER III
OPERATION

3-1. GENERAL.

Figure 3-1 illustrates and describes all front panel controls. Rear chassis controls and connectors are described following the front panel controls, and are illustrated in figure 2-2.

3-2. MAIN TUNING DIAL. This dial consists of 2 transparent discs which display concentric scales and which rotate at different speeds. Zero to 100 kHz is indicated on one disc and hundreds of kHz is indicated on the other. The frequency of the operating signal is the sum of the frequencies indicated by the BAND switch and the Main Tuning dial, for example:

BAND switch frequency	7.000 MHz
100 kHz dial	200 kHz
1 kHz dial	35 kHz
Operating frequency	7.235 MHz

CAUTION

Under no circumstances should operation of the T–4XC be attempted unless it has been connected to a proper antenna or a dummy load of sufficient power handling capacity.

3-3. BIAS ADJUSTMENT.

a. Set RF TUNE, PLATE, LOAD controls to 0.
b. Set band switch to 80 M.
c. Set SSB switch to USB.
d. Set transmitter GAIN at minimum full CCW position.
e. Turn T–4XC on by rotating mode switch to SSB.
f. Allow at least two minutes warmup of tube filaments.
g. Rotate MODE switch to TUNE.
h. Adjust bias control on AC–4 until plate meter reads 0.1 plate amperes and then back down to 0.07 amperes. This is 1-1/2 marks below 0.1 on the meter and just below the mark above the meter scale.

3-4. TUNE UP ON DESIRED BAND.

CAUTION

Do not allow the plate current to exceed 0.15 amps for more than 5 or 6 seconds if the plate control is not tuned for plate current dip or maximum RF output. Failure to observe this warning will result in rapid final amplifier tube deterioration due to excessive plate dissipation. Incorrect setting of RF TUNE may cause illegal output from the transmitter on frequencies other than intended. Always preset the RF TUNE control before proceeding with other steps in tune up procedure.

3-5. Preset controls as follows:

a. RF TUNE to center of band in use. (For out-of-band operation, see figure 3-2.)
b. BAND switch to desired band.
c. MAIN TUNING knob to a frequency inside the amateur band in use.
d. XTALS switch on NORM unless using an accessory range or crystal control.
e. GAIN fully counterclockwise.
f. LOAD fully counterclockwise.
g. SIDEBAND either upper or lower.
h. MODE switch to SSB.

3-6. Before beginning, read through the following procedure until you are thoroughly familiar with it.

a. Rotate MODE switch to the TUNE position. Advance the GAIN control enough to get a plate current indication of about half scale while quickly peaking the RF TUNE control for maximum plate current. Immediately return the MODE switch to the SSB position. It should not take any longer than five seconds to make the above adjustment. If longer time is needed, allow 30 second intervals in the SSB mode in between 5 second periods for tuning in the TUNE mode.

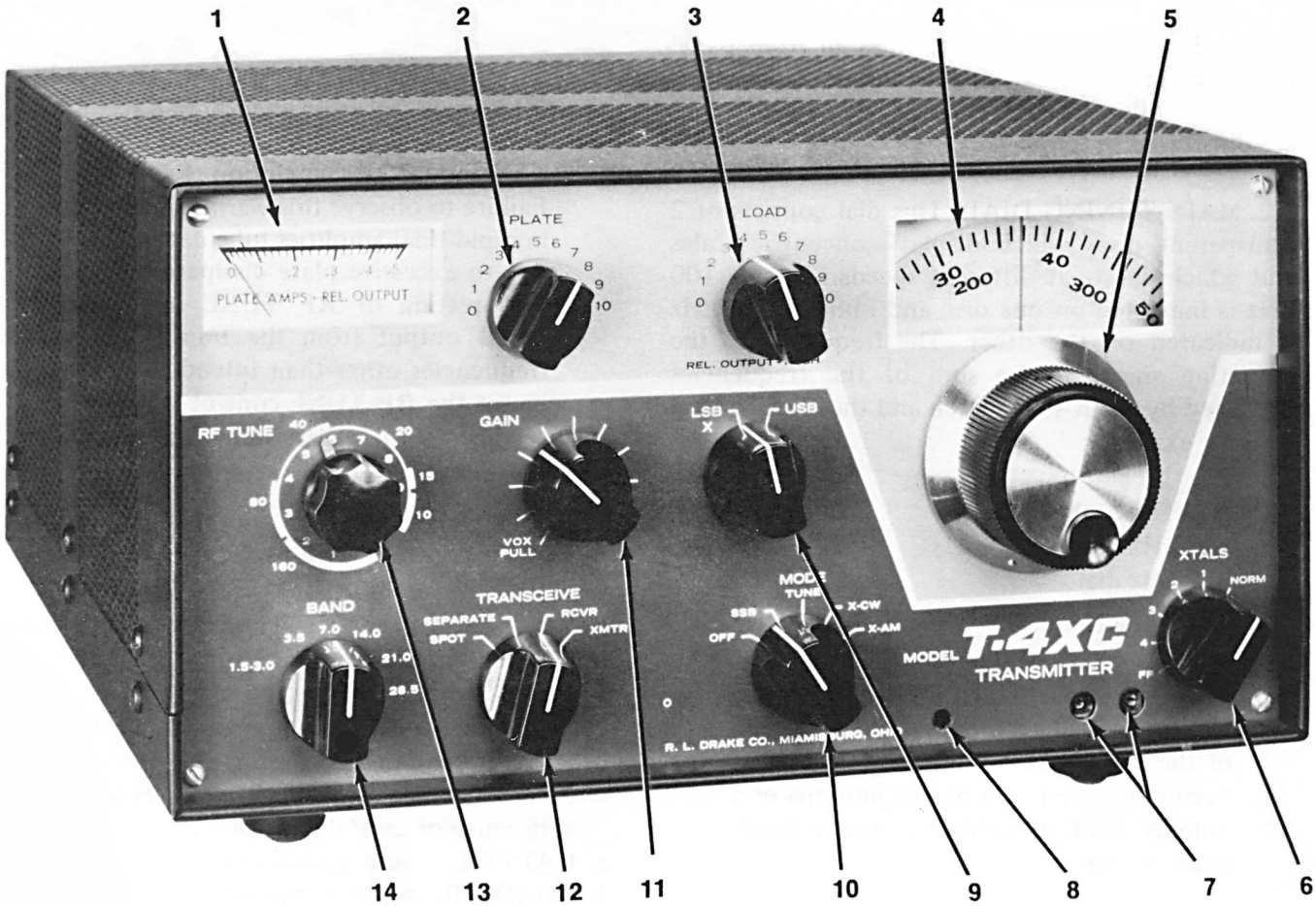

Figure 3–1. Front Panel Controls

FRONT PANEL CONTROLS

1. Meter: Normally indicates plate current. When LOAD control (3) is pushed in, meter indicates relative RF output.

2. PLATE control: Tunes the power amplifier pi-network circuit to resonance.

3. LOAD control: Matches the impedance of the power amplifier to the impedance of the load by varying the output capacity of the pi-network. When this control is pushed in, the Meter (1) displays the relative RF output.

4. Main Tuning dial: Displays a portion of the operating frequency from zero to 500 kHz. Reading must be added to the BAND switch frequency setting for complete operating frequency.

5. Main Tuning control: Adjusts frequency setting of dial (4).

6. XTALS switch: Selects crystals required for use in the various bands. In the NORM position, the required crystal is selected by the BAND switch (14), except for the 1.5-3.0 position. In the FF (fixed frequency) position, operating frequency is determined by the crystal inserted in the front panel Crystal socket (7). Positions 1 through 4 select accessory crystals inserted in the 4 numbered sockets on top of the chassis (for coverage of additional 500 kHz ranges).

7. Crystal Socket: Provides connection for fixed frequency crystal when XTALS switch (6) is in the FF position.

8. Trimmer control: Screwdriver adjust trims Fixed Frequency crystal (7) to exact frequency.

9. Sideband switch: Selects upper and lower sideband. Lower sideband position (LSB) must be used for CW and AM modes as indicated by X.

   NOTE

   The TUNE position of the MODE switch (10) automatically puts the transmitter on the air.

10. MODE switch: Selects mode of operation. Extreme counterclockwise position turns power off.

11. GAIN control: Regulates the microphone gain on AM and SSB. When MODE switch (10) is in X-CW or TUNE position, this control adjusts the RF drive to the proper level. When this control is pushed in, VOX is disabled and the PTT switch must be closed to activate the transmitter. When this control is pulled out, VOX operation is enabled.

12. TRANSCEIVE switch: Determines the frequency controlling PTO when the T–4XC is used with the R–4, R–4A, R–4B or R–4C. This control is also used for frequency spotting. In the SPOT position, low level transmitter stages are switched on but the receiver is not muted to allow the transmitter to be tuned to the receiver frequency. This is done without putting a signal on the air. In the SEPARATE position, the T–4XC determines the transmit frequency and the R–4, R–4A, R–4B or R–4C determines the receiving frequency. PTO lamps on the T–4XC and R–4C will both be on. In the RCVR position, the R–4, R–4A, R–4B or R–4C determines both receiving and transmitting frequencies for transceiving. On this mode, the T–4XC VFO has no effect. The PTO lamp in the T–4XC will not be on.

    NOTE

    When the XTALS switch is in the FF position the transmitter frequency is controlled by the crystal regardless of the position of the TRANSCEIVE switch.

    In the XMTR position, the T–4XC determines the receiving and transmitting frequency and the receiver VFO has no effect. The PTO lamp in the T–4XC will be on, the PTO lamp in the R–4C will be off.

13. RF TUNE control: Tunes the driver grid, driver plate coils, and the premixer output coils. The logging scale is calibrated from zero to 10 and is marked to show the approximate settings for the 160 through 10 meter Amateur bands.

14. BAND switch: Selects the desired Amateur band and switches the RF circuits to the correct tuning frequency range. The frequency range which may be covered for each setting of this control is shown on figure 3-2.

Rear Chassis Controls and Connectors
(Refer to figure 2-2).

VOX DELAY Controls: Two potentiometers used to provide a variable time delay for VOX drop-out. One adjusts dropout time for SSB or AM. The other one adjusts relay dropout for CW.

VOX GAIN Control: Used to adjust the gain of the VOX amplifier. This control is independent of the front panel GAIN control for maximum flexibility.

ANTI VOX GAIN Control: Adjusts antivox sensitivity and sidetone output level.

MICROPHONE Jack: Provides a connection for microphones with push-to-talk switches. This is a 3 conductor, 0.210" diameter connector.

KEY Jack: Provides a connection for a key for CW operation. Normally closed. In other modes the key bus is grounded so that the key can be left in the open position.

Ground Terminal: Provides a connection for earth ground.

RTTY Jack: When a ground connection is made to this jack the carrier oscillator is shifted approximately 500 Hz in the LSB mode and the frequency response of the transmitter is altered so that higher frequency audio tones can be transmitted.

CAR OSC Jack: Couples the 5.645 MHz carrier oscillator injection to the R–4C in SSB mode to phase-lock both units in transceive operation.

PTO LAMP Jack: Provides control of the PTO lamp in R–4C through the T–4XC TRANSCEIVE switch.

INJ Jack: Couples the T–4XC to the frequency controlling circuits of the R–4, R–4A, R–4B or R–4C Receiver if transceive operation is used.

ANTI VOX Jack: Provides a connection for antivox input on receive and sidetone output on transmit.

RCVR MUTE Jack: Provides a short circuit to ground on receive and an open circuit on transmit to mute the receiver.

RCVR ANT Jack: Provides a connection for a Receiver to the antenna through an internal antenna relay.

Power Connector: Provides a connection to the AC–3, AC–4, DC–3 or DC–4 Power Supply. A matching connector is provided on each power supply.

Antenna Connector (SO-239): Provides a connection to the station antenna.

b. Rotate the MODE switch to TUNE. Advance GAIN control to "12 o'clock" position. Quickly adjust the PLATE control for a plate current dip. (Note the CAUTION notice in paragraph 3-4.)
c. Push in on the LOAD control to place the spring loaded meter switch in the relative output position. With the LOAD control depressed, rotate the LOAD control for maximum relative output reading. Do not advance past the point of maximum output. Release LOAD control.
d. Again redip the PLATE control for minimum plate current.
e. Recheck RF tune, adjust slightly for maximum plate current.
f. Repeat steps c and d until no further increase in output is obtained in step c. Complete the procedure with step d.

The above procedure should be completed as quickly as possible and the MODE switch returned to the SSB position. It is important that the transmitter be loaded to maximum output as described above so that proper tank circuit Q is maintained and proper AGC action is obtained. The transmitter is now ready to operate in any mode at the frequency to which it was tuned with the exception of the GAIN control setting which varies with the mode used.

3-7. DIAL CALIBRATION.

Due to the tolerance limits of the various crystals involved, dial calibration may vary slightly from band to band. For this reason, the Main Tuning dial calibration may be adjusted as follows:

a. Set receiver to a known frequency within an amateur band such as a calibrator point.
b. Tune MAIN TUNING dial of T–4XC to same approximate frequency.
c. Set TRANSCEIVE switch to SPOT and MODE switch to SSB.
d. Carefully tune the T–4XC beat note toward zero beat until a "canary" type sound is heard. Two or three "tweets" per second indicate that the units are tuned to within two or three cycles of each other.
e. Hold main tuning knob stationary and rotate the skirt until the dial reads the correct frequency.

3-8. TRANSCEIVE ALIGNMENT FOR USE WITH R–4, R–4A, and R–4B ONLY.

The carrier oscillator is set at the factory and unless you have good reason to believe it to be off, it would be best to assume it to be on frequency. The carrier oscillator can be checked for alignment as described below.

Set the controls as directed in table 3-1.

a. Adjust C61 in the R–4, R–4A or R–4B until the "canary" sound slows down to only a few chirps a second, and then zero chirps a second and then all that is heard is a single tone. Note: This adjustment is *not* made on the R–4C receiver. Connection of the Carrier Oscillator cable from the T–4XC to the R–4C automatically phase locks the frequency of the two units when transceiving.
b. When using the R–4, R–4A or R–4B with the T–4XC, no cable will be connected to the Carrier Oscillator jack of the T–4XC and the above adjustment of C61 can be made if necessary.

3-9. CARRIER BALANCE ADJUSTMENT.

The Carrier Balance control is factory adjusted and should require a minimum of resetting under most conditions. The proper setting of this control can be checked using the following procedure:

After tuning up as described above, set the SIDEBAND switch on X, GAIN fully counterclockwise, and MODE switch to SSB. Either close the push-to-talk line with a short or by plugging a microphone into the microphone jack and pressing the push-to-talk switch. Tune in the carrier with a receiver and adjust Carrier Balance and C17 for minimum S meter readings.

3-10. OPERATION IN VARIOUS MODES.

In the following discussion concerning operation on

Table 3–1 Control Settings for Transceive Alignment

CONTROL OR SWITCH	R–4, R–4A OR R–4B	T–4XC
BAND switch	3.5	3.5
FUNCTION MODE	Slow AVC	SSB Mode
PASS BAND	4.8 with knob at 12 o'clock	– – – – – –
AUDIO	1 o'clock	– – – – – –
TRANSCEIVE	– – – – – –	SPOT
ANTI VOX	– – – – – –	Full Clockwise
SIDEBAND	– – – – – –	Set to the sideband that gives the loudest "canary" sound.
PRESELECTOR	Both R–4B, R–4A, R–4 Preselector and T–4XC RF TUNE should be set to approximately 6.5 and both adjusted for the loudest "canary" sound from the speaker.	

various modes, it is assumed that the T–4XC has been tuned up on the desired band as described in the tuning procedures above.

3-11. SSB OPERATION – VOX AND PTT.

Preset controls as follows:

a. Sideband: Desired sideband (usually lower on 80 and 40 and upper on 20, 15 and 10).
b. Mode switch: SSB.
c. GAIN: Fully counterclockwise.
d. VOX GAIN: (Rear panel control fully clockwise.
e. ANTI VOX: (Rear panel control) fully counterclockwise.
f. SSB VOX DELAY: (Rear panel control) mid range.
g. VOX/PTT switch: VOX (pulled out).

The receiver should be operating normally on the same band except that the audio GAIN control must be turned all the way down. Be sure the switch on the microphone is properly connected as described under installation instructions. Talk into the mike at normal voice level; the relay in the T–4XC should close. Reduce the VOX GAIN until a point is reached where the relay drops out too frequently to suit you. Then advance it just enough to prevent this. (Adjust the SSB VOX DELAY potentiometer for desired holding time.) Stop talking and increase the receiver audio gain control for normal volume and adjust the ANTI VOX clockwise just high enough to prevent cycling between transmit and receive with the microphone in the normal operating position. Speak into the microphone and simultaneously advance the GAIN control until the plate current kicks up scale to approximately 0.15 Amperes. Advancing the GAIN beyond the point where the output no longer increases noticeably will only increase background noise. The push-to-talk switch may be depressed at any time, thus overriding the VOX system. The transmitter will remain on and the receiver muted as long as the switch is down. If you do not desire the VOX to function at all, push in the GAIN control knob. This places the PTT/VOX switch in the PTT position.

3-12. CW OPERATION.

Set controls as follows:

a. Sideband: On X (lower).
b. MODE switch: X-CW.
c. GAIN: 12 o'clock.
d. VOX GAIN: Set where used on SSB.
e. CW VOX DELAY: Fully CW.
f. To provide an audible tone when transceiving with a station on your transmitter frequency, the T–4XC output frequency in CW mode is shifted approximately 750 Hz lower than the controlling VFO indicates. Therefore, set the controlling VFO 750 Hz higher than the desired transmitting frequency.
g. Plug a key into the KEY jack on chassis rear and leave in key up condition. If an electronic keyer is used, connect it for grid block keying. If the sidetone is to be heard on transmit, the anti vox cable must be connected as outlined under installation instructions.
h. Pull out the GAIN control knob to place the VOX/PTT switch in VOX position. To transmit, close the key. Adjust the CW VOX DELAY control for desired "hold-in" time when the key is released.
i. Due to different operating conditions between TUNE and CW, the power output may be lower in the CW position for a given setting of the GAIN control. In CW, with the key down, advance the GAIN control clockwise just below the point at which the plate current no longer increases. Depress the LOAD control, and adjust the LOAD control for maximum as read on the REL OUTPUT Meter.
j. Advance the ANTI VOX control on the rear of the chassis until the sidetone reaches the desired volume.
k. The T–4XC uses automatic transmit-receive keying. This means that it will automatically transmit when the key is depressed and will remain in the transmit condition through keying at all normal speeds. The T–4XC will return to the receive condition when the key is released for a brief period. The relay "hold-in" time may be adjusted with the CW VOX DELAY on the rear panel.

NOTE
Turn CW VOX DELAY control fully CCW for manual operation.

l. If manual transmit-receive switching is desired, a 1/4" phone jack may be added in the "spare" 1/4" hole on the rear of the T–4XC. Connect a wire from this jack to pin 7 of the V10 (6EV7 VOX tube). A foot switch or other switching device may be connected to this jack. When closed, the relay will be activated regardless of whether the key is depressed.

3-13. AM OPERATION.

The T–4XC uses controlled carrier screen modulation for AM. This holds the unmodulated carrier input power to a few Watts but allows up to 200 Watts PEP input on voice peaks.

a. For AM operation, set the MODE switch to X-AM and the SIDEBAND switch to X.
b. While talking into the mike at normal voice level, increase the GAIN control until the plate meter kicks to 0.15 Amps on peaks. Care should be taken not to exceed this level as there is no AGC on AM.

If voice control is to be used, the VOX and ANTI VOX controls should be adjusted as outlined under SSB operation. If push-to-talk is to be employed and you do not want the VOX to function at all, the VOX/PTT switch may be placed in the PTT position.

The T–4XC output frequency in AM mode is shifted 750 Hz lower than the controlling PTO indicates. Therefore, set the controlling PTO 750 Hz higher than the desired transmitting frequency.

3-14. SPOTTING.

The SPOT position of the TRANSCEIVE switch is used to bring the T–4XC to the same frequency as the receiver when separate control is being used. In this position, the receiver is operative but not connected to the antenna. The transmitter final is not operating but the frequency controlling stages are

on and output will be heard in the receiver. On SSB set the receiver and the T–4XC to the same SIDEBAND. Bring the transmitter to the receiver frequency with the Main Tuning dial. A beat note will be heard in the receiver and its pitch will decrease as zero beat is approached. When the two units are near the same frequency, a chirping sound will be heard very much like the sound of a canary. When the "tweets" occur only a few times per second, the transmitter is within a very few cycles of the receiver frequency.

On CW set the receiver and the T–4XC for CW operation. A beat note will be heard as the receiver approaches the T–4XC frequency. Their frequencies will be the same when the pitch decreases to zero beat. It will be necessary to tune the receiver higher or lower than this frequency to hear an audio beat from your transmitter or another station on your frequency. On AM tune the T–4XC for maximum S meter reading or set receiver on CW and zero beat.

3-15. TRANSCEIVING.

When the T–4XC is used in conjunction with the R–4, R–4A, R–4B or R–4C Receiver, transceive operation may be obtained.

NOTE

Only the R–4, R–4A, R–4B or R–4C Receivers may be employed for transceiving. No earlier model DRAKE receiver or transceiver or accessory, or that of any other manufacturer, will provide the correct injection frequencies.

When the T–4XC is used, three operating possibilities are available and are selectable by means of the TRANSCEIVE switch on the front panel, as follows:

a. When in the SEPARATE position, the R–4, R–4A, R–4B or R–4C determines only the receiving frequency and the T–4XC determines only the transmitting frequency.
b. When in the RCVR position, the R–4, R–4A, R–4B or R–4C determines both transmit and receive frequencies. In other words, you will transceive on the frequency to which the R–4, R–4A, R–4B or R–4C is tuned.
c. When in the XMTR position, the T–4XC determines the transceive frequency.

It is normal for the gain of the receiver and transmitter to vary slightly with the position of the transceive switch. Due to the fact that the accessory crystal sockets are more numerous and more accessible on the R–4, R–4A, R–4B or R–4C, it would be desirable to use the receiver for transceiving on frequencies outside the amateur bands. If separate receiver transmitter operation is desired on such a frequency, two crystals will be required; one for the T–4XC and the other for the R–4, R–4A, R–4B or R–4C.

NOTE

If transceiving outside the ham bands is to be attempted with the R–4, R–4A, R–4B or R–4C using the T–4XC, the chart table 2-1 should be followed closely when choosing crystals to avoid illegal spurious outputs.

When transceiving several precautions should be observed.

a. Be sure that the T–4XC is properly connected to the R–4, R–4A, R–4B or R–4C as illustrated in figure 2-4.
b. Both receiver and transmitter must be switched to the same band.
c. Be particularly careful to stay within the confines of the amateur band to be used. This is an easy thing to forget on transceive since your transmitter will be operating on the frequency on which you are listening.
d. Note that BAND switches, sideband selectors, PRESELECTOR, and RF TUNE controls on both the receiver and transmitter must always be properly set whether transceive or separate receive and transmit functions are being used.

The choice of whether or not to transceive when the option is available is largely a matter of operator preference. When operating SSB, it has become standard practice for all stations in contact to be on exactly the same frequency. Transceive is very convenient under this condition. However, when working an elusive DX station which is operating out-

side the American band, separate control is mandatory. When operating in a round table in which one or more stations differ in frequency by a few hundred cycles, it may be preferable to leave the transmitter set on the round table frequency and use separate control of the receiver to follow the strays.

On CW, if the note that your ear is trained to prefer differs from that employed by the T–4XC shifted carrier system, transceive may lead you to chase each other up or down the band as each retunes to get the pitch he likes. Separate control solves this problem.

3-16. OPERATION ON ACCESSORY FREQUENCIES.

The design of the T–4XC Transmitter will permit operation of the unit on many frequencies outside the ham bands, such as MARS frequencies, etc. Some frequencies, where spurious outputs may occur or where sufficient output cannot be obtained, cannot be used. These frequencies are 2.3 to 3.0 MHz, 5.0 to 6.0 MHz and 10.5 to 12.0 MHz.

There is no crystal for 160 meter operation included in the transmitter. If you plan to use this band, you need an additional crystal in one of the auxiliary crystal sockets. The same is true of the 10 meter band from 28.0 to 28.5 MHz or above 29.0 MHz. To operate on these frequencies or on any of the frequencies shown in table 2-1, a crystal of the frequency listed in this chart must be added in one of the auxiliary sockets provided in the T–4XC or in the R–4, R–4A, R–4B or R–4C Receiver.

In the T–4XC, provision is made for plugging in up to 4 additional crystals for four additional 500 kHz segments and the XTAL switch on the front panel provides for selecting the desired crystals. To tune up on such frequencies, set the XTAL switch to the crystal required, set the BAND switch as indicated in table 2-1 and the RF TUNE control as indicated in figure 3-2.

If you plan to transceive, the PRESELECTOR on the R–4, R–4A, R–4B or R–4C must also be peaked on the correct frequency as indicated on the preselector chart in the instruction book for these receivers.

NOTE

It is possible to obtain output from the transmitter on the crystal frequency rather than the desired frequency if the RF TUNE control is misadjusted. The settings shown in figure 3-2 should be checked and closely followed when tuning on any accessory frequency.

From this point on, tuning procedure should be the same as described for various modes of operation on the HAM bands.

In selecting crystals for operation outside ham bands, table 2-1 should be followed carefully. Use of other crystals may result in illegal output on other frequencies as well as on the desired frequency.

3-17. CRYSTAL CONTROLLED OPERATION.

The XTALS switch is placed in the fixed frequency (FF) position. A crystal is then placed in the socket on the front panel of the T–4XC. A trimmer capacitor for fine frequency adjustment is provided. This adjustment can be made through the small access hole in the front panel. The crystal can be used to control the frequency of only the T–4XC or for transceive operation depending on the setting of the TRANSCEIVE switch.

3-18. CRYSTAL CONTROLLED SSB.

a. When crystal controlling the T–4XC directly by using a crystal in the front panel crystal socket, the crystal frequency is equal to the desired output frequency plus 5645 kHz.
b. If the crystal frequency calculates to a value above 15 MHz but less than 30 MHz, the second harmonic of the crystal is used; therefore, order a crystal of one-half the calculated frequency.
c. If the crystal frequency calculates to a value above 30 MHz, the third harmonic of the crystal is used; therefore, order a crystal of one-third the calculated frequency.

3-19. CRYSTAL CONTROLLED CW.

To obtain CW operation with the T–4XC Transmitter, the 5645 kHz oscillator is shifted up in

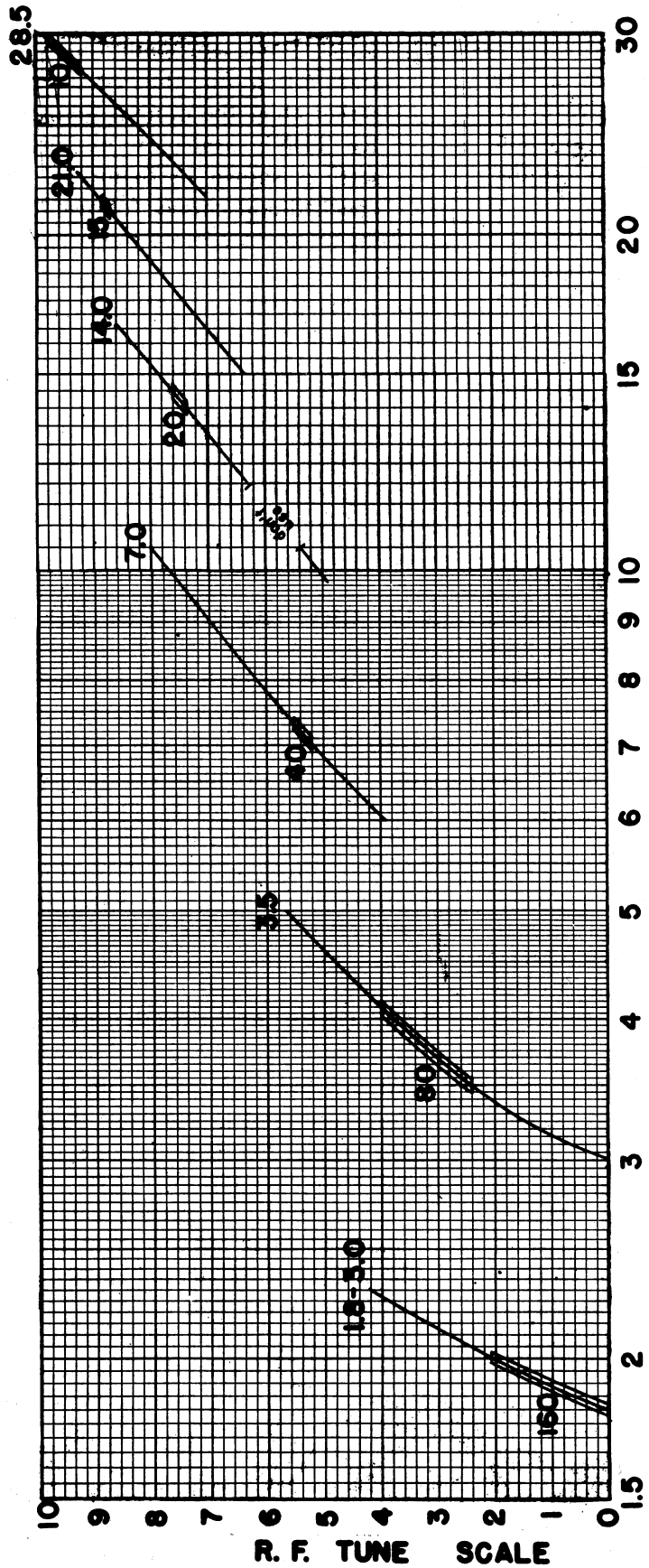

Figure 3–2. RF Tune Calibration Curves of the Useful Range for Each BAND Switch Position

frequency approximately 750 Hz. Therefore, to operate crystal controlled, either by crystal controlling the transmitter or R–4, R–4A, or R–4B Receiver, the crystal used must be approximately 700 Hz lower in frequency than that used for SSB crystal controlled operation. In most cases such as novice operation, this is not important. But if exact frequency operation is wanted, this shift in frequency must be taken into account. This can be done by using 5645 + 1 instead of 5645 kHz used in the above SSB calculations.

Fine frequency adjustment can be made by the trimmer capacitor across the crystal socket accessible through the front panel. All further tune up is exactly the same as described earlier under Tune Up paragraph 3-4.

If used on the novice bands with crystal control, maximum legal input power is 75 Watts which occurs when the Plate Meter reads 0.115 amps. To realize the most useful output under these conditions, readjustment of the Bias control on the Power Supply is suggested. Follow the Bias Adjustment procedure paragraph 3-3 but under step h, set bias for minimum readable plate current. If the transmitter is used both on novice band and by another operator on SSB or AM, the bias must be readjusted to its former value before such operation is attempted.

To load the transmitter for novice operation, preset controls as described under paragraph 3-4 Tune Up. Turn the MODE switch to TUNE and advance GAIN for a very slight increase in plate current. Tune RF TUNE for a peak in plate current, being careful not to exceed 0.115 amps, and quickly tune PLATE control for a dip in plate current. Turn GAIN control fully clockwise and adjust LOAD control until plate dip occurs at 0.115 amps. If plate current dip is higher than this when LOAD control is set to 0, reduce the GAIN for plate reading of 0.115. Turn MODE switch to X-CW and set GAIN control for a plate current of 0.115.

3-20. OPERATION WITH A LINEAR AMPLIFIER.

The R. L. Drake Model L–4B Linear Amplifier was designed to match the T–4XC Transmitter in appearance and drive requirements to run the maximum legal input power. The L–4B offers continuous 2000 Watts PEP SSB, and 1000 Watts D.C. on CW, AM and RTTY operation covering the ham bands 80 through 10 meters. Frequencies between 3.5 to 30 MHz other than ham bands may also be covered with some retuning of the input coils in the L–4B.

The T–4XC Transmitter has sufficient output power to drive most linear amplifiers. A triode type grounded grid linear will usually present a satisfactory load (approximately 50 Ohms) for the T–4XC.

If your linear is of the grounded cathode type with high input impedance, it will be necessary to install a resistive pad between the transmitter and the linear that will present the proper impedance. Such a pad must be made of non-inductive resistors and must have adequate power handling capacity to prevent its being destroyed when the transmitter is turned on.

Antenna switching should be accomplished as shown in figure 2-5. Many linear amplifiers such as the Drake L–4B have these relays built in.

Before operating the T–4XC with a linear amplifier, the instruction manual of the linear should be consulted. The instructions contained here are, of necessity, generalized and precedence should be given to any specific precautions in the instructions accompanying the linear amplifier since it is improbable that these could lead to any danger to the exciter.

To load the transmitter into a linear, preset the controls as follows:

a. RF TUNE: Desired band.
b. Sideband: Lower (LSB).
c. GAIN: Counterclockwise
d. BAND switch: Desired band.
e. LOAD: Zero.

Turn MODE switch to TUNE and advance GAIN control until plate Meter moves up scale slightly from idling current. Peak RF TUNE, being careful not to exceed 0.150 amps plate current and tune PLATE control for dip in plate current. Set LOAD

control as indicated in accompanying table. Redip PLATE control and tune linear as described in the linear amplifier instructions.

Turn MODE switch to desired mode of operation and advance GAIN control until desired amount of input to the linear amplifier is obtained.

Proper LOAD setting for 50 Ohm resistive load

BAND	LOAD
160	2.5
80	3.5
40	4.5
20	4.5
15	4.5
10	4.5

3-21. RTTY OPERATION.

Two methods of RTTY operation are possible with the T–4XC as described below:

a. An appropriate shift circuit can be connected to the FSK terminal on the side of the PTO. Several shift cirucits have been published which accomplish the shift. Some examples of possible keying circuits are described in an article by Irvin Hoff in the May, 1965, issue of QST. The only modification is that instead of connecting the shift capacitor to the "VFO cathode", this point is connected to the FSK terminal on the side of the PTO. Refer to figure 3-3. The FSK terminal on the PTO in the T–4XC is a small lug located between the prongs of the mounting clip on the right side of the PTO as viewed from the front panel.

   One example of such a shift circuit is shown in figure 3-3. The capacitor values are based on 850 Hz shift and thus smaller values will be needed for narrow shift. The value of RX should be selected to limit the current through the 1N270 shift diode to about 1 mA.

b. Refer to figure 3-4. The second method of generating a RTTY signal employs the use of audio oscillators to generate AFSK. When the audio tones are fed through an SSB transmitter, a simulated FSK signal results. The T–4XC may be used in this mode if regulations permit; however, the carrier oscillator frequency must be shifted approximately 500 Hz farther away from the center of the filter passband. This shift alters the frequency response of the transmitter so that the commonly used 2975 Hz tone frequency falls within the passband of the SSB crystal filter, and also increases unwanted sideband rejection and carrier rejection.

   A jack is provided on the rear of the T–4XC to shift the carrier oscillator as described above. Supplying a ground to the RTTY SHIFT jack will shift the carrier oscillator when the transmitter is in the LSB mode. Therefore, if this method of RTTY is used, the transmitter must be used in the LSB mode. Do not forget to remove the short at the RTTY SHIFT jack when returning to SSB voice operation.

   When transceiving with an R–4C Receiver with the RTTY SHIFT jack grounded, the receiver frequency will shift along with the transmitter carrier oscillator so that true transceive operation can be utilized if the terminal unit receives the same tone frequencies as the AFSK tone generator generates.

3-22. PHONE PATCH CONNECTIONS.

If the phone patch in the C–4 Station Console is used with the T–4XC, provisions are included in the C–4 to accomplish all audio switching. However, if a phone patch other than the one in the C–4 is used, an additional audio connection may be desired. A 1/4 inch phono jack can be installed in the "spare" 1/4 inch hole on the rear panel of the T–4XC. A piece of shielded audio cable may be used between this jack and the MIC jack to make the parallel audio connection. The "ring" of the microphone plug is the audio connection.

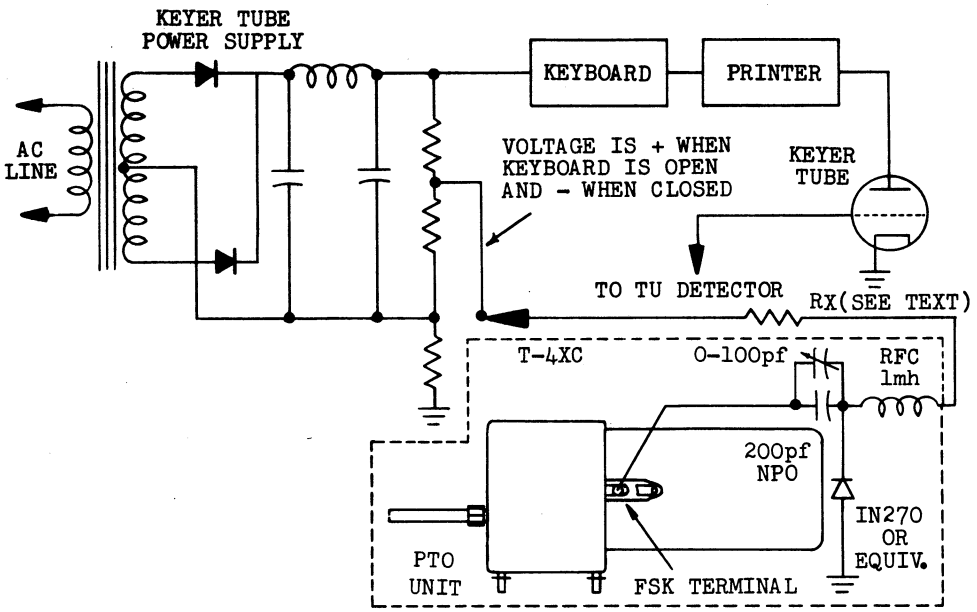

Figure 3–3. FSK Circuit

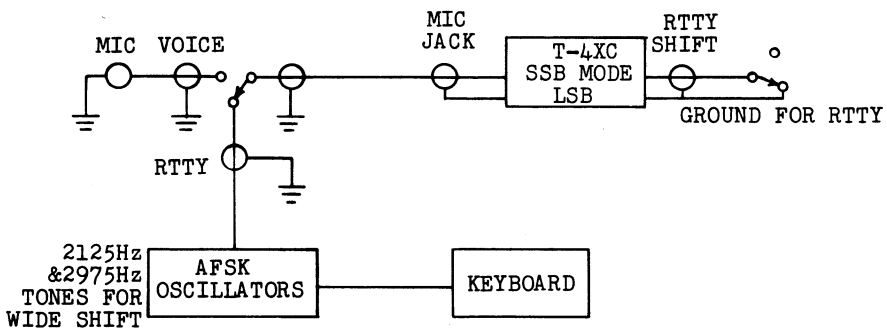

Figure 3–4. AFSK Circuit

NOTES

CHAPTER IV
THEORY OF OPERATION

4-1. GENERAL.

Refer to the block diagram figure 4-1 and the schematic diagram figure 5-4 for the following discussion. The SSB signal transmitted by the T–4XC is the result of mixing 3 separate oscillators and the audio signals from the mike. The SSB signal is used as the basic example for this discussion. The differences employed in generating an AM or CW signal are explained where they are pertinent.

4-2. SIDEBAND GENERATION AND RF CIRCUITS.

The signal on single sideband begins in a crystal controlled oscillator Q2 running at 5645 kHz on all bands. Output from this FET is fed to a four diode balanced modulator through buffer FET Q3 and the carrier balance control R4.

The audio signal from the mike is amplified by V9. Note that half of the GAIN control R88 appears in the grid circuit of the second half of this tube and serves to control its output. Two different audio outputs are taken from V9B. Low impedance output from the cathode is applied to the balanced modulator through the MODE switch for SSB operation. High impedance output is taken from the plate and goes to the grid of V7 for screen modulation of AM.

4-3. VOX CIRCUIT.

Audio is also fed to the VOX amplifiers, V1A and V10A through the VOX GAIN Adjust control R77. The output from V10A is rectified and thus supplies positive DC voltage which is applied to the grid of the relay control tube V10B, causing it to conduct and close the transmit relay. Audio voltage from the receiver reaches the transmitter through the anti-vox cable and is rectified by CR13 and CR14. The resulting negative voltage is applied to the grid of V10B, so that audio from the speaker picked up by the mike will not cause the relay to close.

For push-to-talk operation, the negative bias on V10B is shorted to ground, thus causing the tube to conduct and close the relay and hold it in as long as the push-to-talk switch is closed. The VOX/PTT switch disables the VOX circuit and allows only PTT control by shorting the audio applied to the VOX amplifier.

Returning to the balanced modulator, the audio and 5645 kHz RF inputs combine to produce an output of double sideband suppressed carrier. This is amplified through V2 and, after impedance transformation in T2, is applied to either the upper or lower crystal filter where the undesired sideband is filtered out. The resulting SSB signal is fed through T3 to the mixer stage V3. The second input for this mixer is supplied by the premixer stage.

4-4. FREQUENCY CONTROLLING CIRCUITRY.

In the T–4XC, the permeability tuned oscillator (PTO) Q6, controlled by the main tuning dial, oscillates on frequencies from 4955 to 5455 kHz. Output from this stage goes to the premixer through buffer stage Q5. Another transistor oscillator Q7 is crystal controlled and runs at frequencies 11.1 MHz above the low edge of the band in use. In the premixer stage V8, the output of the high frequency crystal oscillator and the PTO are combined and the difference is taken from the plate through T4 and T5 and fed to the mixer V3. Note that when the T–4XC is being used to transceive, the receiver may also be used as the frequency control with the injection voltage being supplied from the receiver; or if desired, the T–4XC may supply the injection voltage through the same cable to control the receiver.

Returning to the mixer, V3, a 5645 kHz SSB signal is supplied to the control grid from the filter, and high frequency injection from T5 to the same grid. The plate of this tube is tuned to the dif-

ference of these two signals by T6. It then goes to the driver stage V4 where it is amplified and applied to the parallel grids of the 6JB6A's, V5 and V6 through the tuned circuit of T7. These tubes serve as linear amplifiers and raise the signal to a suitable power level for the transmission. The output is matched to a 52 Ohm load by means of the pi-network consisting of C83, L6, L7 and C90.

4-5. MISCELLANEOUS CIRCUITS.

The two injection frequency transformers, T4 and T5, and the two driver transformers, T6 and T7, are all permeability tuned by the RF TUNE control which positions their slugs in such a manner that the correct relationship between injection and output frequency is maintained. The injection frequency is always 5645 kHz higher than the transmitted frequency.

In order to minimize flat-topping in the final stage, if too much signal is provided by the driver, a transmitting AGC circuit is included. At the first trace of over-drive, grid current will be drawn which produces a voltage drop across R37. The small negative-going voltage thus obtained is applied to the cathode of V1B where it is amplified. It is then applied to the grid of V2, thus reducing the driver signal.

Diodes CR9 and CR10 rectify a portion of the output waveform envelope and apply the resulting voltage to the grids of the 6JB6A power amplifiers, V5 and V6, in the proper phase relationship to reduce crossover distortion.

The meter of the T–4XC normally reads final amplifier plate current. It is connected in the cathode circuit of these tubes. When the load control on the front panel is depressed, the meter is connected as an RF output meter. This circuit samples the output voltage at the antenna and rectifies it.

In the CW mode, the 5645 kHz oscillator is shifted slightly in order to put the carrier within the passband of the "lower" crystal filter. A DC voltage is applied to the balanced modulator, thus unbalancing it. The amount of DC voltage and thus the amount of RF output is determined by the setting of the GAIN control. The signal then proceeds through the unit as it does on SSB. Grid block keying of the mixer V3 and driver V4 is used. The sidetone oscillator utilizes the first audio stage V9 as a phase shift oscillator to produce an audio signal for monitoring. When the key is down, this signal is fed to the receiver audio output transformer through the anti-vox cable using V9B and V7 as amplifiers. When the key is up CR15 shorts this signal to ground due to the fact that keying is also applied to it. To trip the transmit/receive relay instantly when the key is closed, a pulse generated by CR16 and C115 is applied to the grid of the relay control tube V10. During keying the relay will remain in the transmit position since keyed sidetone output is applied to the VOX system. Hold-in time is adjustable with the CW delay pot R73.

On AM the carrier oscillator Q2 is again shifted into the passband of the lower sideband filter. A DC voltage applied through R104 is used to unbalance the balanced modulator. Audio from the mike amplifier is supplied to V7 which provides modulation to the screen of the driver stage V4. The resulting output signal is controlled carrier screen modulated AM. Note that the AGC circuitry does not function when the transmitter is on AM. VOX and push-to-talk functions are identical on AM with those described for SSB.

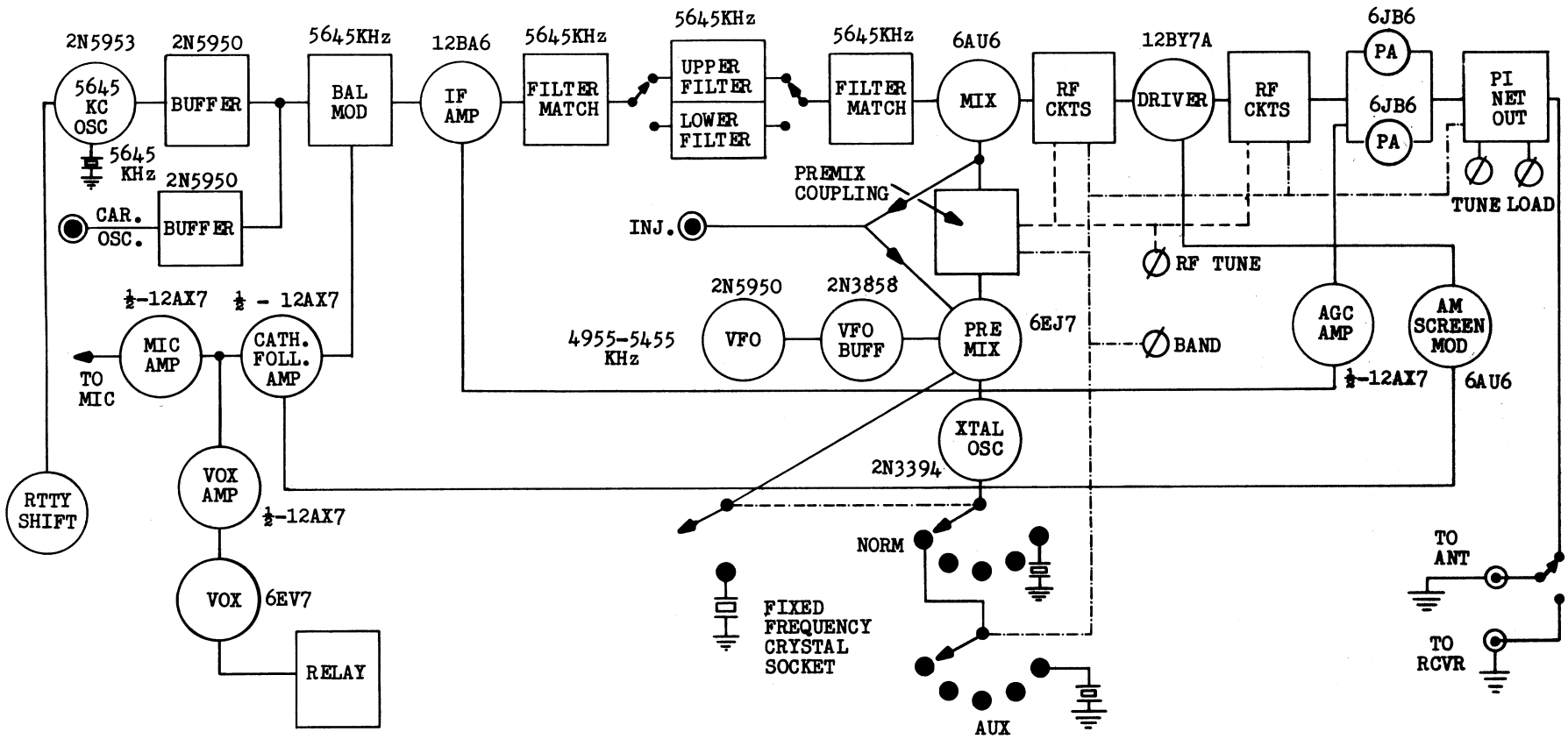

Figure 4–1. Block Diagram

NOTES

CHAPTER V
MAINTENANCE

5-1. SERVICE DATA.

We will check and align your transmitter at the factory for a nominal fee if it has not been tampered with. Transportation charges are extra. Any necessary repairs will be made on a time and material basis. Please write or call the factory for authorization before returning your transmitter for alignment or service. Address your request for authorization to:

R. L. Drake Company
540 Richard Street
Miamisburg, Ohio 45342
ATTN: Customer Service Department
Telephone: (Area Code 513) 866-3211
Code-A-Phone Service after
1630 Hours E.S.T.
Telex No. 288-017

WARNING

Extreme caution should be exercised when the top and bottom covers are removed. High voltage is present at several points which can cause a lethal electrical shock. Repairs and adjustments should be made only by a qualified electronics technician. Disconnect the Power Supply from the T–4XC before removing the covers.

5-2. TOP COVER REMOVAL.

a. Remove the 3 top screws on each side of the T–4XC.
b. Remove cover by first pulling up on the rear and then on the front of the cabinet.

5-3. BOTTOM COVER REMOVAL.

a. Remove the 6 bottom screws from the sides of the T–4XC.
b. Lift the T–4XC chassis out of bottom cover.

5-4. TUBE REPLACEMENT.

In general, most trouble in radio equipment of good design is due to the failure of tubes. The best method of finding defective tubes is by direct substitution. It is best not to rely too heavily on tube checkers. The T–4XC has been designed so that, with the exception of V4, V5 and V6, tubes can be replaced without need for realignment. When V5 and V6 are replaced, the final amplifier section should always be neutralized. See paragraph 5-10. under alignment instructions. If V5 and V6 are replaced with a different brand than originally supplied, it will be necessary to realign the driver plate circuit. See paragraph 5-7. under alignment instructions. If V4 is replaced with the same brand, no realignment is necessary. The T–4XC is shipped with matched pairs of 6JB6A tubes. Matched pairs of 6JB6A tubes are available from the factory at a nominal cost. To replace the 6JB6A tubes, it will be necessary to remove only the top of the final amplifier cage. This can be accomplished by removing the forward and rear sheet metal screws holding the top to the cage and then lifting the top out of the two side clips. To replace the cage, simply reverse the process. Be sure that the parasitic suppressors do not short to the cage. Contact R. L. Drake Customer Service Department for prices and ordering information to replace tubes or other components.

5-5. TROUBLE-SHOOTING.

Careful consideration has been given in the design of the T–4XC to keep the maintenance problems to a minimum. However, it is quite possible that some problem will arise which cannot be cured by tube substitution. If this occurs, we suggest that you either return your unit to your dealer, or write directly to our Customer Service Department describing your problem in detail. Include full information concerning external connections, control settings, tubes substituted, etc. Do not return equipment to the factory without prior authori-

zation. Always include the serial number of the unit when requesting service information.

In case of malfunction, first check power supply fuse on the AC–4 or DC–4 and filament fuse in the T–4XC for continuity. The voltage and resistance charts, tables 5-1 and 5-2, should be valuable in isolating minor problems. However, no attempt should be made to service the T–4XC unless you are thoroughly familiar with electronic circuitry and servicing technique. Care should be taken not to disturb the lead dress in the T–4XC since several circuits are quite critical in this regard.

5-6. TEST EQUIPMENT.

Alignment of the T–4XC will require the following equipment:

a. An 11 megohm VTVM with RF probe.
b. A 52 Ohm dummy load of sufficient power handling capacity (Heathkit Cantenna).
c. The T–4XC has a built-in RF output indicator which can be used. However, an external indicator would be much more convenient.
d. A 12.6 MHz crystal for R–4, R–4A, R–4B or R–4C and T–4XC if 1.8 – 3.0 MHz range is to be aligned.

CAUTION

Do not attempt to operate the transmitter without connecting it to a dummy load or serious damage may result.

5-7. ALIGNMENT PROCEDURES.

Certain T–4XC Transmitters have the slugs in coils T4, T5, T6, and T7 color coded at assembly. Make sure that the slugs are adjusted *exactly* to the dimensions shown for the various color codes in the procedures outlined below.

5-8. RF AND MIXER STAGES.

a. Set the RF TUNE knob to its clockwise stop. Measure the exposed portion of the slugs above the coil forms on T4, T5, T6, and T7. They should measure: 9/16" with no dot or white dot; 19/32" with yellow dot; 39/64" with red dot.
b. Set RF TUNE control to counterclockwise stop and set the pointer to zero by slipping it on the shaft.
c. 80 meter alignment.
   1. Adjust RF TUNE control until: slugs with no dot or white dot are even with top of coil; yellow dot measure 1/32" above coil; red dot measure 3/64" above coil.
   2. Set the transmitter frequency to 3.700 MHz.
   3. Tune and load the transmitter without moving the RF TUNE control. If the transmitter loads to over 200 mA plate current, reduce the plate current to 200 mA by turning down the GAIN control.
   4. Refer to figure 5-3. With the plate current at 200 mA or less, tune the two 3.5 MHz RF trimmers for maximum plate current. The RF trimmers are in the two columns nearest the rear of the chassis, along the left side. If the plate current exceeds 200 mA, reduce it by turning down the GAIN control.
   5. Detune T5 by touching the rotor contact of S–4B (the second band switch wafer from the front) with a screw driver with an INSULATED HANDLE and tune the front 3.5 MHz injection trimmer for maximum plate current.

      WARNING

      The rotor of S–4A is connected to 250 Volts! Use extreme caution.

   6. Detune T4 by touching the screw driver to the rotor contact of S–4A (the front band switch wafer) and tune the rear injection trimmers for maximum plate current. Always keep the plate current below 200 mA with the GAIN control.

d. For the different bands repeat 3 through 6 above using the settings given below:

Band	VFO	SLUG DIMENSIONS ABOVE TOP OF COIL		
		White or no dot	Yellow	Red
7.0	7.200	3/16"	7/32"	15/64"
14.0	14.200	11/32"	3/8"	25/64"
21.0	21.500	7/16"	15/32"	31/64"
28.5	28.900	31/64"	33/64"	17/32"

e. On 160 meters, adjust the RF TUNE control so that the slugs with no dot or with white dot are 3/32" below the top of the coil form; yellow dot 1/16" below; red dot 3/64" below. A 12.6 MHz crystal is needed in the T–4XC for this adjustment with the VFO set to 300 (1.8 MHz).

5-9. CARRIER OSCILLATOR, FILTER MATCH AND BALANCED MODULATOR.

a. Follow the regular tune-up procedure on any ham band. Turn MODE switch to SSB, rotate GAIN full CCW and connect push-to-talk line to ground at the mike jack.
b. Rotate Carrier Balance control on top of chassis full CCW.
c. Switch Sideband switch to upper sideband and adjust C6 for 0.1 amps of plate current. Tune T14, T2 and T3 for maximum plate current.
d. Depress the LOAD control so that relative output is measured on the meter and adjust C6 so that when switching between upper and lower sideband, the relative outputs are equal or unreadable. Or, if an accurate counter is available, connect it to the CAR OSC jack on the rear panel and adjust C6 for exactly 5645 kHz.
e. Rebalance carrier as described in paragraph 3-9.

5-10. NEUTRALIZING FINAL AMPLIFIERS.

a. Set BAND switch to 28.5 and Main Tuning dial to 0.800. Follow standard tune-up procedure while loading into 52 Ohm dummy load.
b. Depress LOAD control to read relative output. Note meter reading, then back off GAIN control until approximately 2/3 of maximum output is obtained. Release LOAD control.
c. Very carefully adjust PLATE control so that you are exactly on the dip in plate current. Depress LOAD control. Observe reading. Tune plate capacitor clockwise slightly to see if there is a rise in relative output. Return to exact plate current dip and again depress LOAD control and tune plate capacitor counterclockwise slightly, looking for a rise in output meter indication.
d. If there was little or no rise in output in either direction, the transmitter is properly neutralized. If the output did rise on either side of the plate current dip, neutralization is necessary. Adjust C64 in small steps, repeat steps a through c after each adjustment until maximum output and plate current dip exactly coincide. (The adjustment screw for C64 is accessible in the power amplifier compartment beneath the chassis. Note: Use an insulated screw driver as B+ is connected to the rotor of C64.)

5-11. CRYSTAL OSCILLATOR CHECK.

a. In order to tell whether or not the crystal oscillator is operative on a particular crystal in the T–4XC, first locate the 6EJ7 premixer V8 and temporarily short the cathode (pin 3) to ground.
b. Measure the voltage on the grid (pin 2) with the DC probe of an 11 megohm VTVM through a 1 megohm series resistor on end of probe.
c. If the oscillator is operating properly, a negative voltage of several Volts will be observed.

5-12. VFO ADJUSTMENT.

The permeability tuned VFO was carefully adjusted at the factory and should require no further alignment. If it does not appear to track from one end of its range to the other, it should be returned to our plant for realignment. Maximum calibration error is 1 kHz when calibrated to the nearest 100 kHz point.

Table 5–1. Resistance Chart

TUBE		PIN NUMBER								
REF DES	Type	1	2	3	4	5	6	7	8	9
V1	12AX7A	230 K	2.2 Meg	0	Fil	0	0	12 K	30 K	Fil
V2	12BA6	1 Meg	0	0	Fil	6.8 K	55 K	∞		
V3	6AU6A	450 K	0	Fil	Fil	6.0 K	73 K	∞		
V4	12BY7A	∞	97 K	0	Fil	0	NC	5.5 K	20 K	0
V5	6JB6A	6.5 K	30 K	∞	0	Fil	30 K	6.8 K	0	∞
V6	6JB6A	6.5 K	30 K	∞	Fil	Fil	30 K	6.8 K	0	∞
V7	6AU6A	22 Meg	∞	Fil	0	36 K	20 K	∞		
V8	6EJ7	∞	330 K	∞	0	Fil	0	5 K	76 K	0
V9	12AX7A	430 K	1 Meg	0	Fil	Fil	300 K	500 K	3.3 K	0
V10	6EV7	100 K	1.3 Meg	820	Fil	Fil	15.5 K	1 Meg	90 Ohm	0

NOTES:
1. All measurements were made from ground with transmitter connected to AC–4 Power Supply and with power supply disconnected from AC line.
2. Controls were set as follows: BAND–7.0; MODE–TUNE; GAIN, VOX, and ANTI VOX controls all fully clockwise. The position of other controls is unimportant.

Table 5–2. Voltage Chart

TUBE		PIN NUMBER								
REF DES	Type	1	2	3	4	5	6	7	8	9
V1	12AX7A	110	1.5	0	12.6*	0	0	–62	–60	—
V2	12BA6	0	0	0	12.6*	240	95	2.2		
V3	6AU6A	–.3	0	6.3*	12.6*	240	140	2.2		
V4	12BY7A	0	–2.8	0	12.6*	0	NC	235	160	0
V5	6JB6A	250	–60	.8	0	6.3*	–60	250	0	.3
V6	6JB6A	250	–60	.8	6.3*	12.6*	–60	250	0	.3
V7	6AU6A	0	0	6.3*	0	50	130	1.7		
V8	6EJ7	2.5	0	2.6	0	6.3*	0	250	100	0
V9	12AX7A	95	–.8	0	6.3*	6.3*	138	0	1.1	0
V10	6EV7	105	0	1.3	6.3*	12.6*	170	–.1	–.66	NC

NOTES:
1. All measurements were made from ground with an 11 megohm VTVM.
2. Unit was tuned into dummy load on 40 meters as described in TUNING PROCEDURE, GAIN control was reduced to minimum, and MODE switch left on TUNE.
3. AC–4 Power Supply was used.
4. An * indicates AC voltage.

Table 5–3. Tube and Semiconductor Complement

REF DES.	NUMBER	FUNCTION
V1	12AX7A	AGC Amp, VOX Amplifier
V2	12BA6	IF Amplifier
V3	6AU6A	Mixer
V4	12BY7A	Driver
V5, 6	6JB6A	Power Amplifier
V7	6AU6A	AM Modulator
V8	6EJ7	Premixer
V9	12AX7A	MIC Amp/Sidetone Oscillator
V10	6EV7	VOX
Q1, 3	2N5950	Source Followers
Q2	2N5953	Carrier Oscillator
Q4	2N4125	RTTY Carrier Oscillator Shift
Q5	2N3858	VFO Buffer
Q6	2N5950	VFO
Q7	2N3394	Crystal Oscillator
CR1	Z–13B	Voltage Regulator
CR2	1N4148	RTTY Carrier Oscillator Shift
CR3	1N4148	RTTY Carrier Oscillator Shift
CR4	B5G5	Carrier Oscillator Keying
CR5, 6, 7, 8	1N541	Balanced Modulator
CR9, 10	1N4148	Envelope Feedback Detectors
CR11, 12, 20	1N4148	Output Meter Circuit
CR13, 14, 16	1N4148	VOX & Anti-VOX Rectifiers
CR15	1N4148	Sidetone Keyer
CR17	1N4148	Trigger
CR18	1N714	Voltage Regulator
CR19	B5G5	Spot Level Isolation

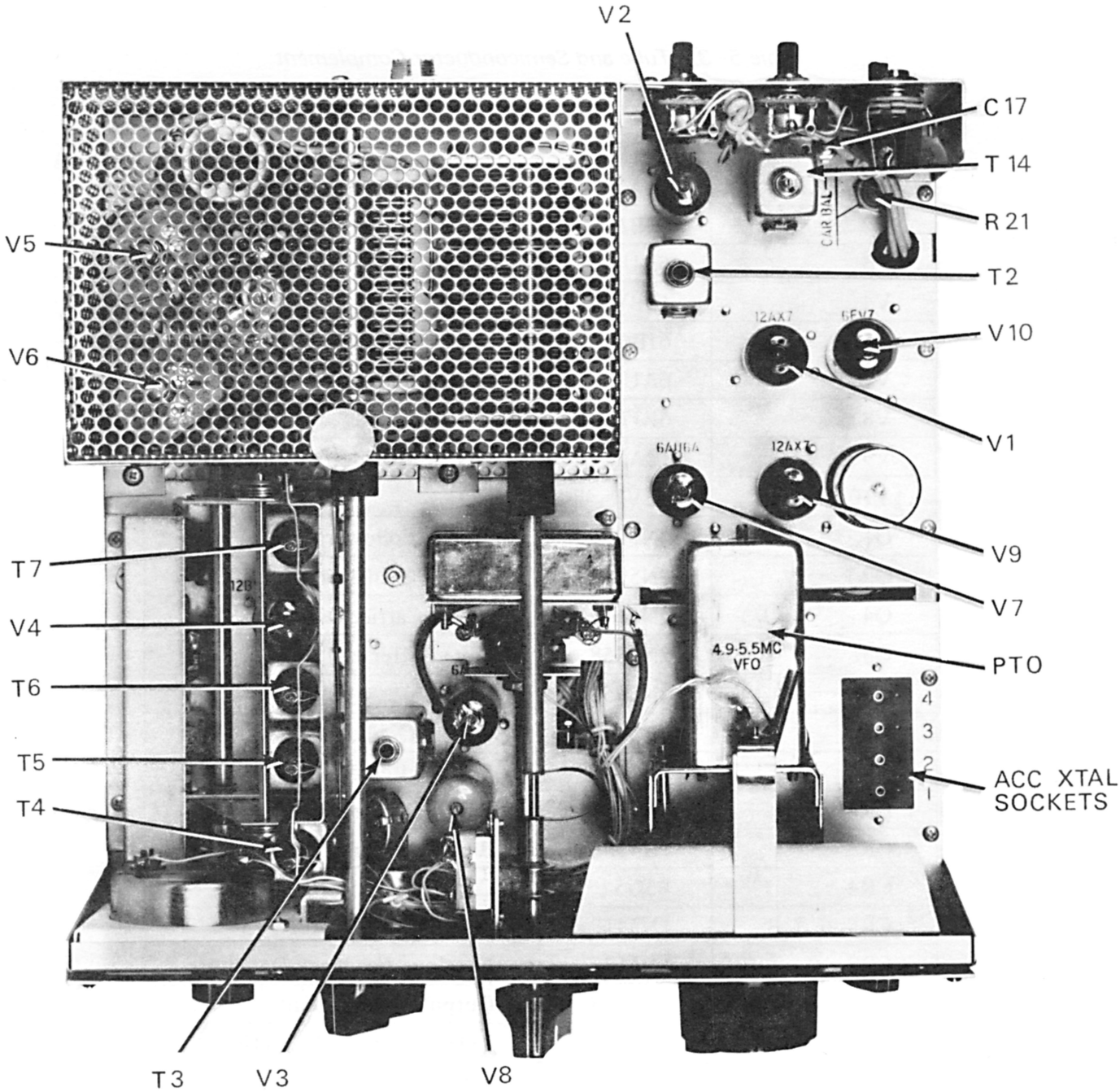

Component Locations

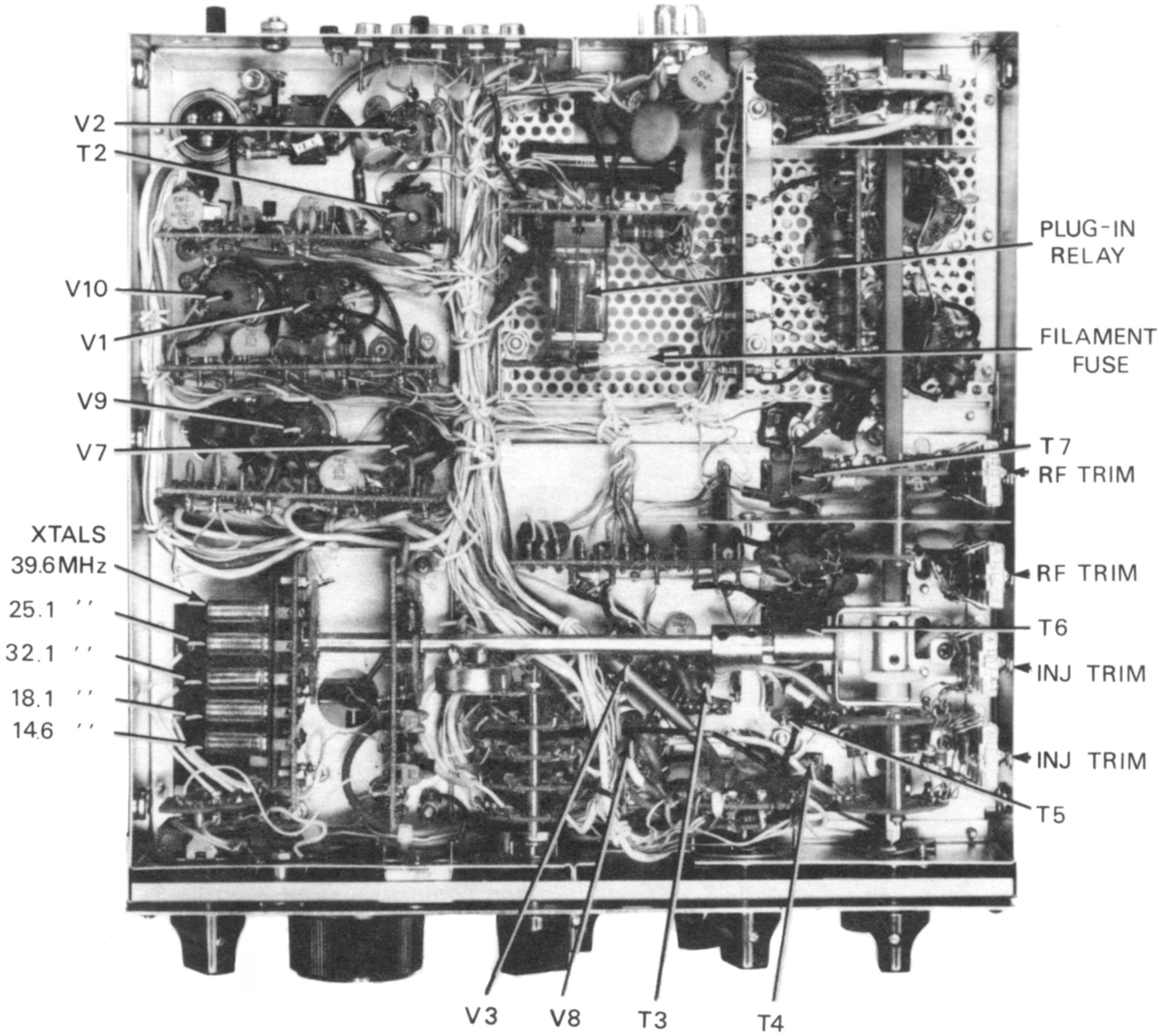

Figure 5–2. Component Locations, Bottom View

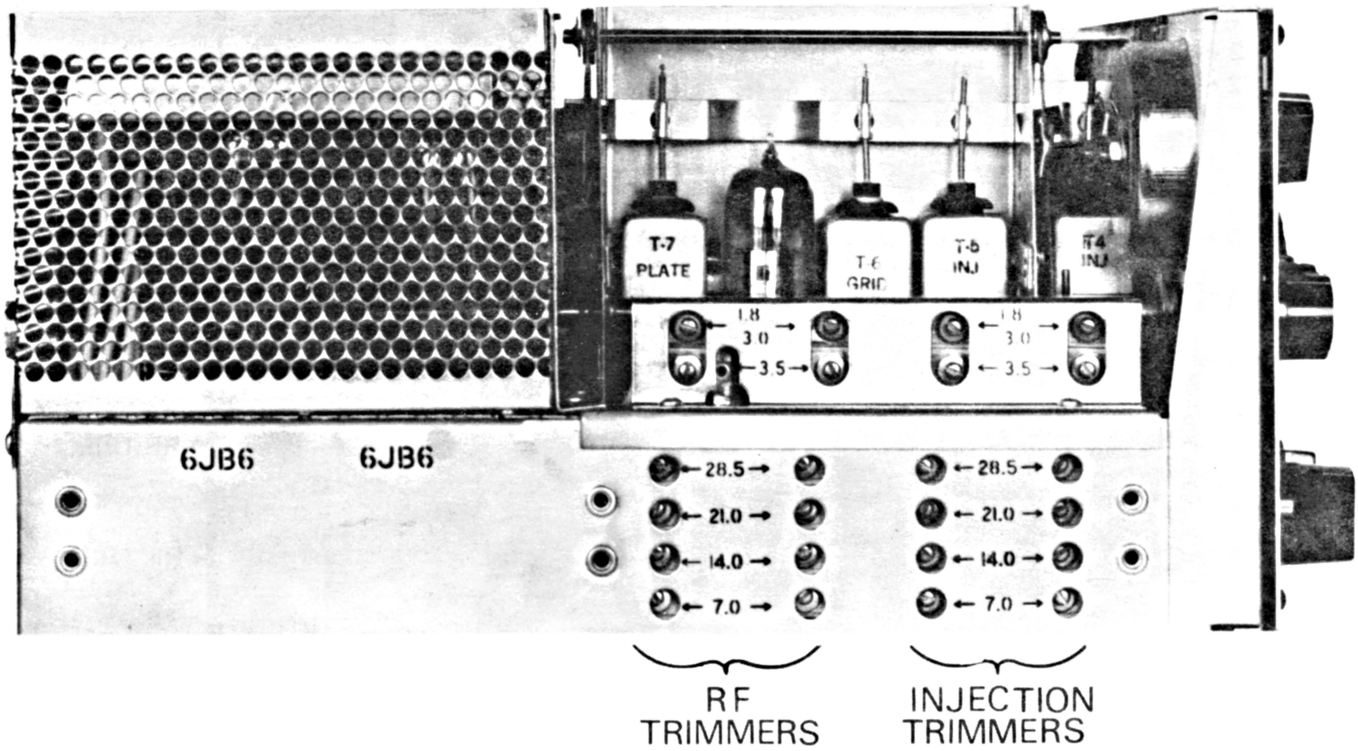

Figure 5–3. RF and Injection Trimmers

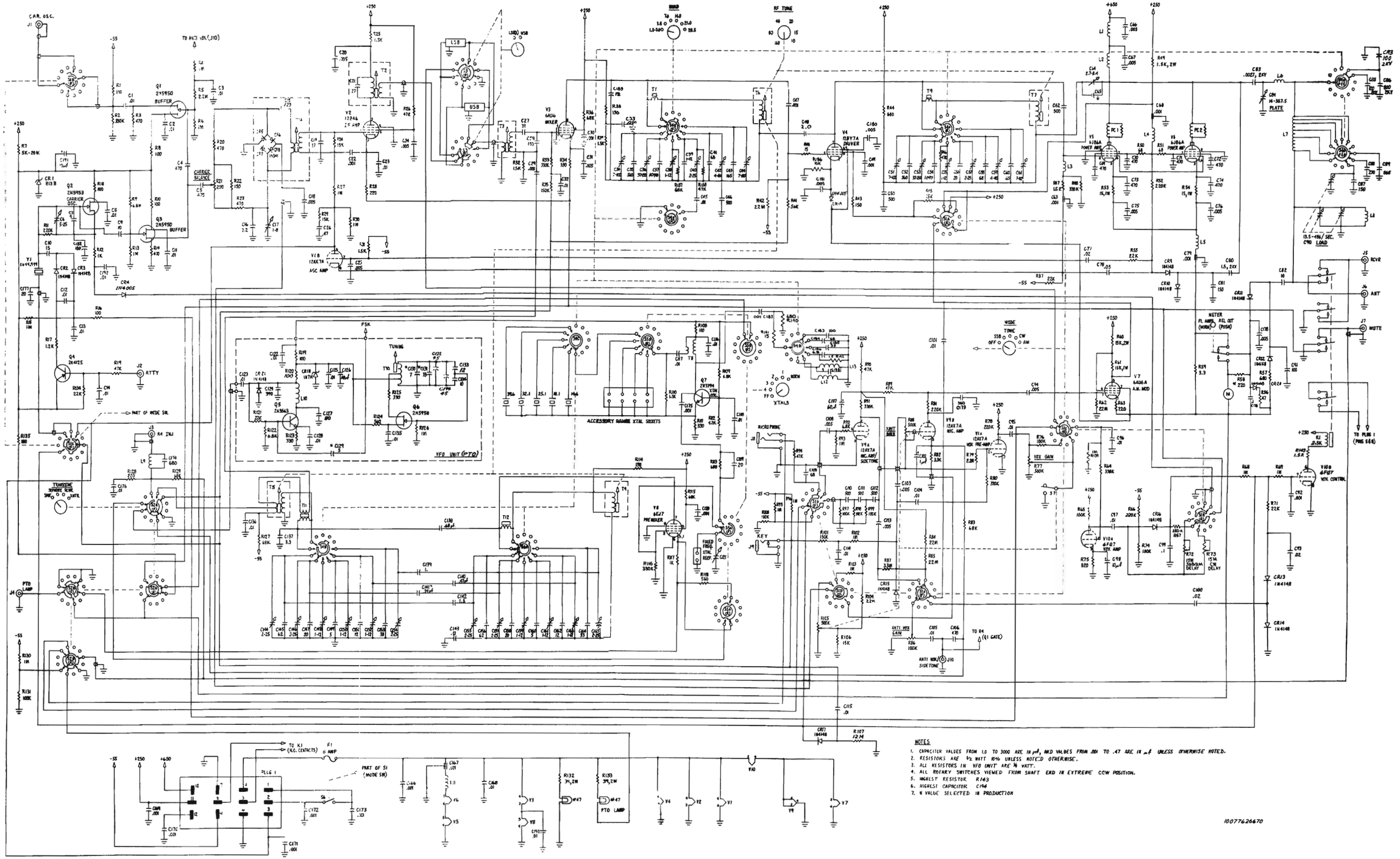

Figure 5–4. Schematic Diagram

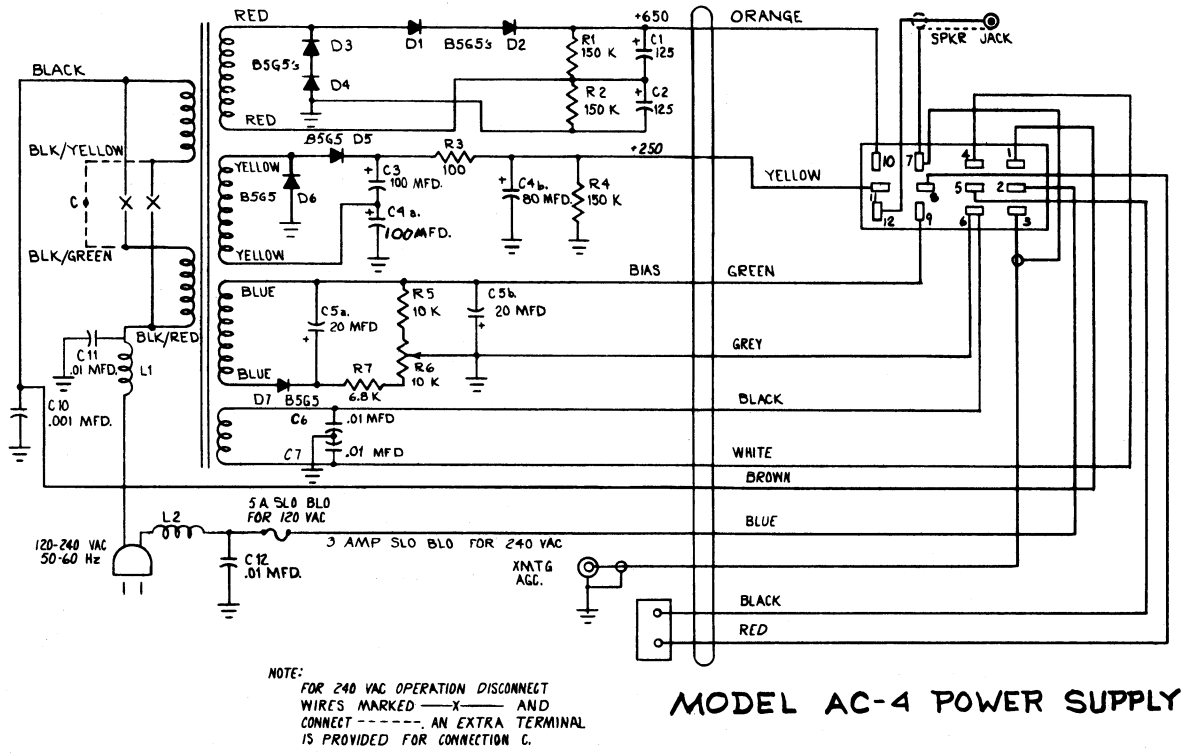

NOTE:
FOR 240 VAC OPERATION DISCONNECT WIRES MARKED —X— AND CONNECT ------. AN EXTRA TERMINAL IS PROVIDED FOR CONNECTION C.

MODEL AC-4 POWER SUPPLY

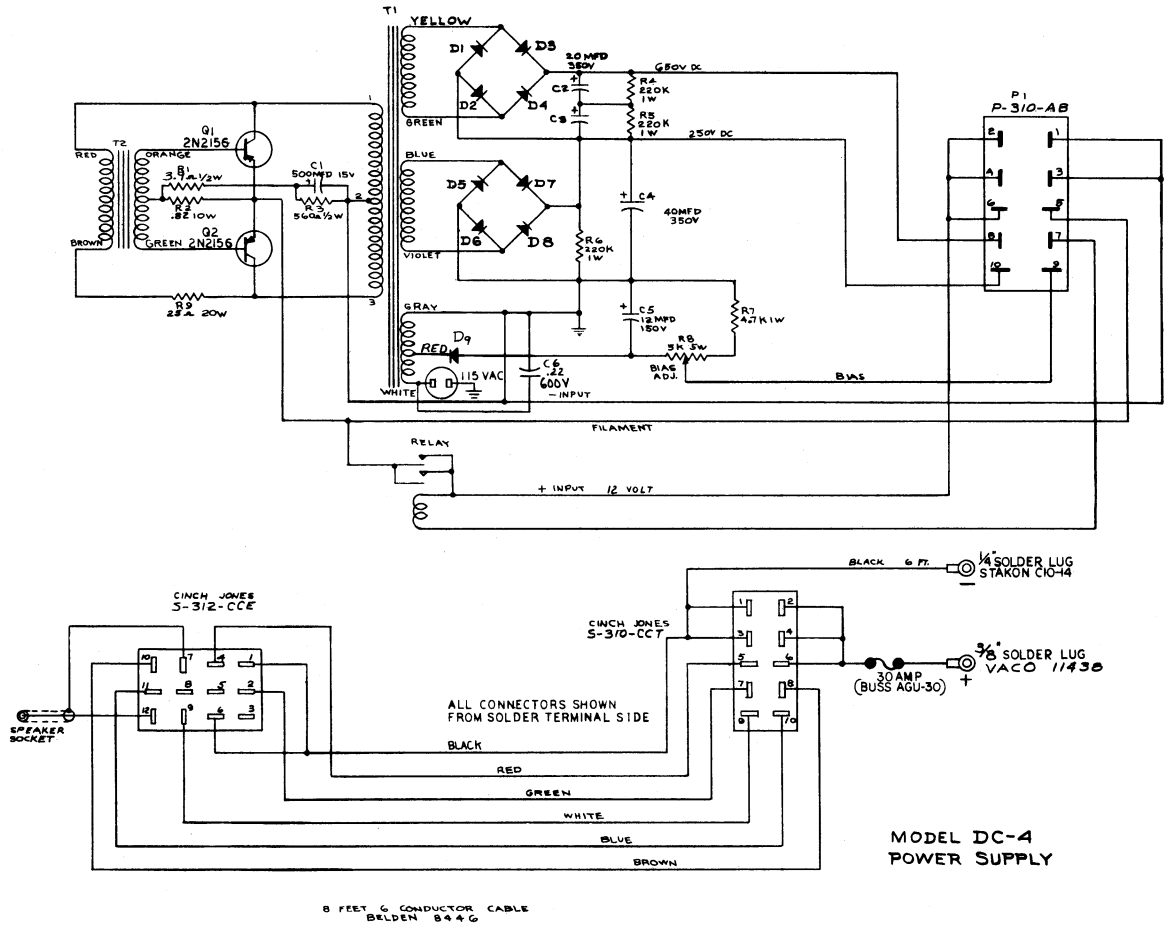

MODEL DC-4 POWER SUPPLY

Figure 5–5. Power Supply Schematic Diagrams

DRAKE AMATEUR PRODUCTS

R-4C — *Receiver, covers the 160 meter through 10 meter amateur bands and up to fifteen additional 500 kHz ranges. It has 8-pole crystal filter selectivity with passband tuning and transceives with the T-4XC with excellent sensitivity.*

T-4XC — *Transmitter, covers the 160 through 10 meter amateur bands and most other frequencies between 1.5 and 30 MHz. It has 8-pole crystal filters for sideband selection. It may be used to transceive with the R-4C.*

TR-4C — *Transceiver, 300 Watt high frequency single-sideband unit covers the 80 meter through 10 meter amateur bands. Includes AM and CW modes, a linear, permeability-tuned VFO and two 8-pole crystal lattice filters.*

L-4B — *Linear Amplifier, built for continuous duty at full capacity. 2000 Watts PEP on SSB. 1000 Watts on AM, CW and RTTY. Covers the 80 meter through 10 meter bands.*

SPR-4 — *An all solid-state communications receiver which can be programmed with accessory crystals to cover 150 kHz to 30 MHz. The SPR-4 receives AM, CW, SSB, (upper and lower) and may be powered from 120 VAC, 240 VAC, and 12 VDC.*

FS-4 — *Frequency Synthesizer, built for use with R-4 series, SPR-4, 2-C receivers, and T-4X series transmitters.*

MN-4 — *Antenna Matching Network, matches 50 Ohm transmitter output to coax antenna feedline with VSWR up to 5:1. An integral Wattmeter reads forward power in Watts and VSWR directly. 200 Watts continuous duty output.*

MN-2000 — *Antenna Matching Network. Same as MN-4 except: 1000 Watts continuous duty output (2000 Watts PEP) and 3 antenna connectors switch-selectable from front panel.*

W-4 — *Wattmeter, reads forward and reflected power directly in Watts (VSWR from nomograph). Range: 200 and 2000 Watts full scale, 1.8 to 54 MHz.*

WV-4 — *Wattmeter, reads forward and reflected power directly in Watts (VSWR from nomograph). Range: 100 and 1000 Watts full scale, 20 to 200 MHz.*

TR-33C — *Transceiver, 2 meter VHF-FM, portable. Twelve channels, self-contained batteries and attached microphone.*

RCS-4 — *Remote Coax Switch, provides remote selection of up to five antennas, using only one main feedline. Allows grounding of unused antennas. Motor driven switches controlled from station located console.*

SSR-1 — *General Coverage Receiver, 0.5-30 MHz continuous. All solid state.*

For information on any of our products, please feel free to write our Sales Department, 540 Richard Street, Miamisburg, Ohio 45342 or call direct, 513-866-2421.

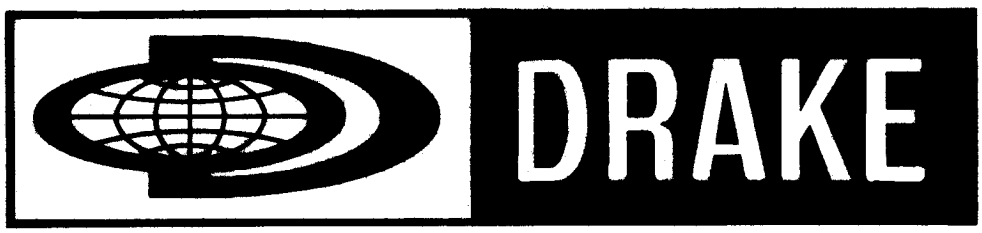
DRAKE