INSTRUCTION MANUAL



R. L. DRAKE

MODEL

34-NB

NOISE BLANKER KIT



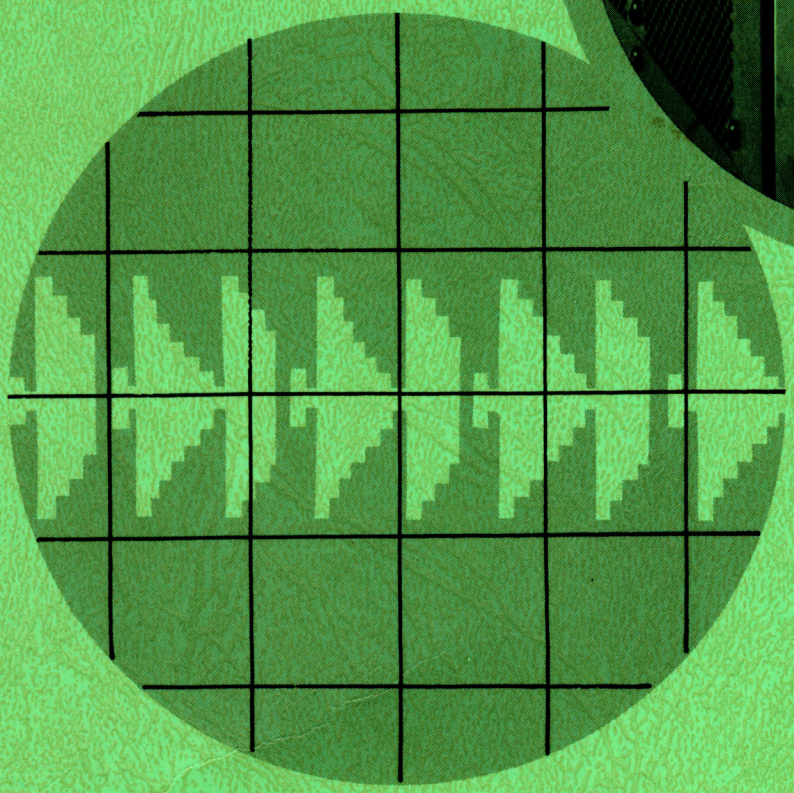

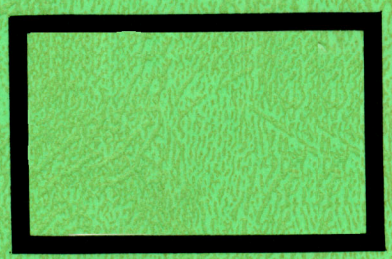

STANDARD WARRANTY

R. L. DRAKE COMPANY warrants each new radio product manufactured by it to be free from defective material and workmanship and agrees to remedy any such defect or to furnish a new part in exchange for any part of any unit of its manufacture which under normal installation, use, and service discloses such defect, provided the unit is delivered by the owner to us or to our authorized radio dealer or wholesaler from whom purchased, intact, for our examination, with all transportation charges prepaid to our factory, within ninety days from the date of sale to original purchaser and provided that such examination discloses in our judgement that it is thus defective. Should a malfunction be suspected, write in detail to our Service Department for suggestions concerning the operation, repair or return of your unit if it should prove necessary.

This warranty does not extend to any of our radio products which have been subjected to misuse, neglect, accident, incorrect wiring not our own, improper installation, or to use in violation of instructions furnished by us, nor extend to units which have been repaired or altered outside our factory, nor in cases where the serial number thereof has been removed, defaced or changed, nor to units used with accessories not manufactured or recommended by us.

Any part of a unit approved for remedy or exchange hereunder will be remedied or exchanged by the authorized radio dealer or wholesaler without charge to the owner.

This warranty is in lieu of all other warranties expressed or implied and no representative or person is authorized to assume for us any other liability in connection with the sale of our radio products.

The R. L. DRAKE COMPANY reserves the right to make any improvements to its products which it may deem desirable without obligating itself to install such improvements in its previously manufactured products.

TABLE OF CONTENTS

I.	GENERAL DESCRIPTION	2
II.	OPERATION	3
III.	SYSTEM DESCRIPTION	5
	Recommended Tools for Kit Installation	6
KIT PARTS LIST		7
IV.	INSTALLATION	
	A. General	9
	B. Mechanical	9
	C. Electrical	15
V.	ALIGNMENT	18
	A. NBK Board	
	B. T-6 Filter Match	
	C. 9-NB Board Alignment	20

ILLUSTRATIONS

Fig. #1	Block Diagram	4
Fig. #2	Bottom View	10
Fig. #3	Template Location	11
Fig. #4	Top View of TR-4	12
Fig. #5	9-NB PC Side	16
Fig. #6	9-NB Component Side	19
Fig. #7	Schematic Drawing	21

I. GENERAL DESCRIPTION

The 34-NB is a solid state noise blanker to be used in any TR-3 or TR-4 transceiver.

Unlike noise clippers or limiters commonly found in communication equipment, the 34-NB is an advanced noise blanker which actually mutes the receiver for the duration of the noise pulse. Between noise pulses full receiver gain is restored. (The receiver AGC is affected only by the desired signal strength, not by the noise at the antenna.)

The 34-NB is most effective on strong, periodic noise impulses such as ignition noise. The blanker is least effective on random noise (e.g. atmospheric or front end noise). This noise is continuous in time and the information it masks cannot be recovered by either blanking or limiting techniques. However, loss of communications due to random noise is a rare occurrence - generally impulse noise is responsible for such situations.

Low level signals masked by noise impulses without the noise blanker can be copied when the blanker is used. The 34-NB is a must for the mobile operator because he can now blank ignition noise due to trucks and other cars as well as his own car.

II. OPERATION

The 34-NB noise blanker functions when the lever arm under the "plate" tune control is in the "N.B." position. When transmitting the position of the lever arm is unimportant.

In most situations it is desirable to leave the blanker on continuously. However, it may happen you are copying an extremely weak signal under no noise conditions. In this situation, it may be advantageous to turn the blanker off since occasional peaks of atmospheric noise may trigger the blanker and generate additional noise.

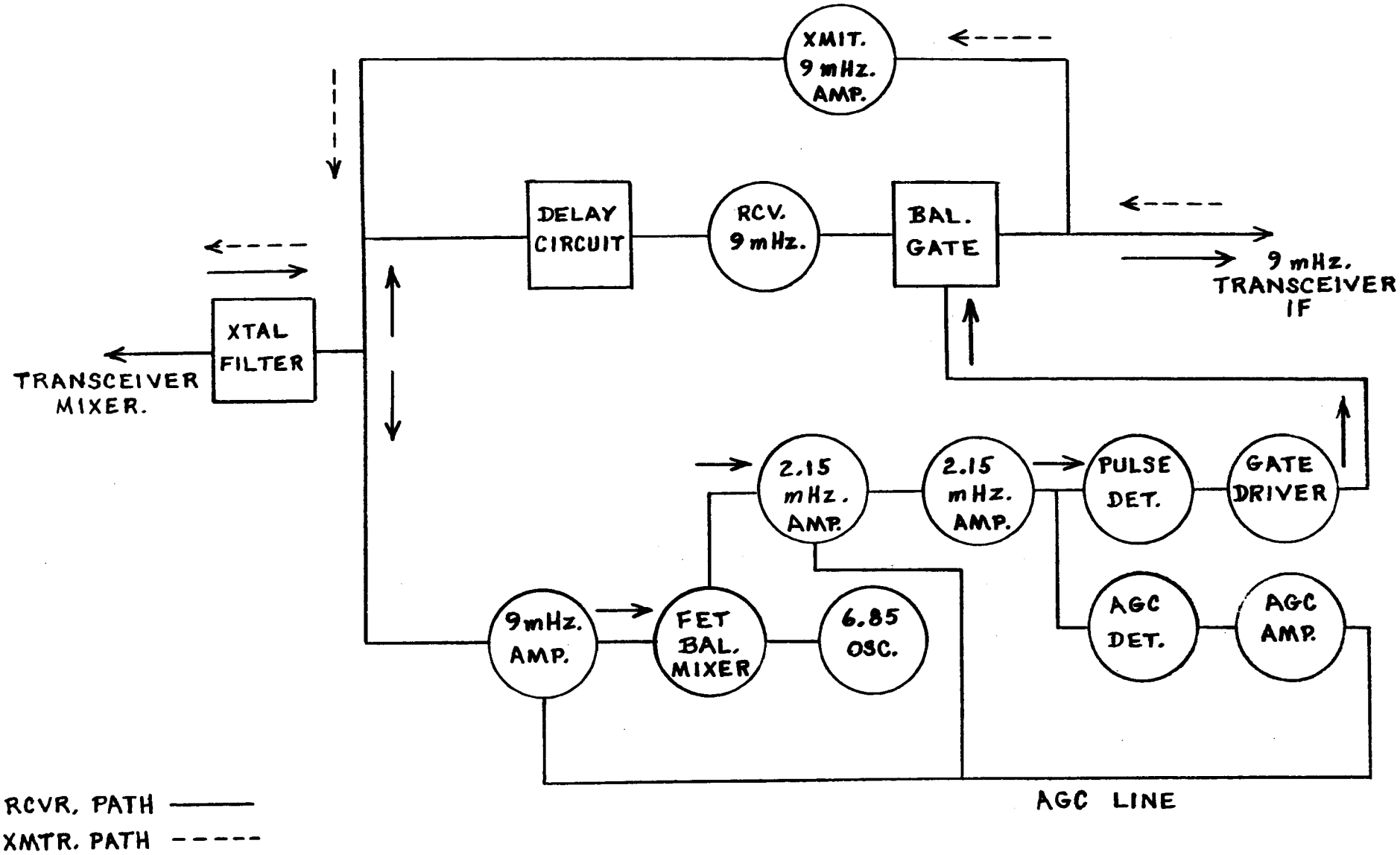

BLOCK DIAGRAM
FIGURE 1.

III. SYSTEM DESCRIPTION

The 34-NB noise blanker system can be broken down into three major parts for the purpose of discussion.

The first part - the transmitting path - is the simplest. It consists of a single RC coupled 9 mHz amplifier which passes the transmit signal through the blanker as well as making up for any loss in the matching networks. The signal then passes through the crystal filter passband and into the transmit mixer.

The second part is the receiver path. Referring to the block diagram, the signal first passes through a crystal filter with a band width wide enough to pass most of the noise frequency components but narrow enough to keep strong adjacent signals from overloading the 34-NB amplifier. The signal simultaneously enters the noise processor (discussed later) and the delay circuit, a reactive network which compensates for the inherent phase shift of the noise processing section. The 9 mHz receive amplifier provides an overall system gain for the receive path. The balanced gate is a noiseless electronic series switch that opens for noise pulses but closes to allow the signal to pass.

The third part is the noise processor and the most complicated of all. The signal passes through the tuned 9 MHz amplifier and into the balanced mixer. This mixer converts the 9 MHz noise pulses to 2150 kHz and prevents the high level 6.85 MHz oscillator signal from reaching the amplifier strip. The 2150 kHz noise pulses travel through the two amplifiers, detector, and into the gate driver. The gate driver reverse biases the gate at the instant a 9MHz noise pulse enters on its way to the receiver I.F. The gate then is controlled by the same pulse it is blanking, enabling it to automatically respond to pulses of varying width.

If the noise blanker had been installed in the receiver I.F. strip near the detector, much circuitry could have been eliminated. The disadvantage to this shortcut method is deterioration in the noise performance due primarily to filter ringing. In other words, the noise pulse would encounter the non-linear phase response of the high "Q" crystal lattice filter and lengthen, masking more of the desired signal. The narrow crystal lattice filter would also remove the high frequency components of the noise pulse, thus reducing its rise time. The noise pulse is now highly distorted and the noise blanker has difficulty separating the pulse from the desired signal.

Although more expensive, we decided not to cut corners and designed the 34-NB for maximum noise performance - something the mobile operator especially will appreciate.

RECOMMENDED TOOLS FOR KIT INSTALLATION

Soldering gun or iron
Rosin core solder
Electric drill
Standard blade screwdriver
Small 1/8" blade screwdriver
Long nose pliers
Wire cutter/stripper
Alignment tool (plastic shaft with spring steel blade)
Gas Pliers

KIT PARTS LIST

P.C. BOARDS

1 9-NB board with mounting feet but less case, filter capacitors and harness. Solder terminals bent at 45°.

1 NBK Board with one piece 12" RG174 cable connected to bottom and one piece 12" RG174 (banded on free end) connected to top.

HARDWARE

1 AA-F terminal strip

1 #43 drill bit

5 #4 x 1/4" sheetmetal screw

2 9-NB brackets

1 capacitor assembly (includes two 1000 mfd capacitors and FAA terminal strip)

1 metal template

1 0.125" x 8-1/2" shaft with 1/4 dia. flatted tube soldered flush to end

1 switch with hardware

1 switch mounting bracket

1 lever knob

1 set screw knob with 0.125" I.D. phenolic insert

1 "N.B. - OFF" label

1 #6-32 nut and lock washer

WIRE

1	brown/white	48"
1	red/white	12"

KIT PARTS LIST con't.

1	yellow/white	12"
1	white	12"

Components

1 0.01 Z5U capacitor

1 0.001 Z5U capacitor

1 1.5K 1/2 watt resistor

1 L-11 TR-4 choke (16 microhenries @ Q58) 1-1/2" leads

IV. INSTALLATION

A. GENERAL

Although the noise blanker kit looks involved, the complexity is in the main printed circuit board and the installation is not as difficult as it may appear. The entire job can be completed easily by following the series of simple steps outlined in Parts B and C, below. No attempt should be made to rush through the installation because the performance of the 34-NB and appearance of the finished job will affect resale value of the transceiver.

If factory installation is desired, a $15 installation fee along with the return of the transceiver and 34-NB is necessary. Round trip shipping expenses will be paid by the customer. If a malfunction is discovered in the transceiver, it will automatically be serviced and handled under our standard service policy, which is $10 service charge plus cost of any parts.

B. Mechanical

It is recommended that the Installation Procedure be read through in its entirety before starting the actual modification. An entire step must be read through before beginning work on the step. Refer to the top and bottom views of the transceiver chassis, in your Transceiver Instruction Manual, in order to locate various components.

Step 1. Remove transceiver from cabinet (top and bottom).

Step 2. Remove the bandswitch shaft. This is accomplished by removing the knob from the shaft (front), then removing the two (2), #4 screws which secure the switch detent to the rear of the chassis. The detent and shaft can then be withdrawn from the switch wafers, through the rear of the chassis. The shaft should be withdrawn in a straight line to prevent damage to the switch wafers or rotors. Also, care should be taken to prevent rotation of the switch rotors while the shaft is removed.

Step 3. Turn the transceiver upside down and locate Filter Match T-6. A 1.5 K, 1/2 watt resistor and a 0.001 mfd. capacitor is tied to one terminal of T-6. Unsolder this resistor and capacitor lead from the T-6 terminal allowing the other end of these two components to remain soldered. Bend the two components out of the way.

NOTE: Care should be taken to avoid bending of the T-6 terminal.

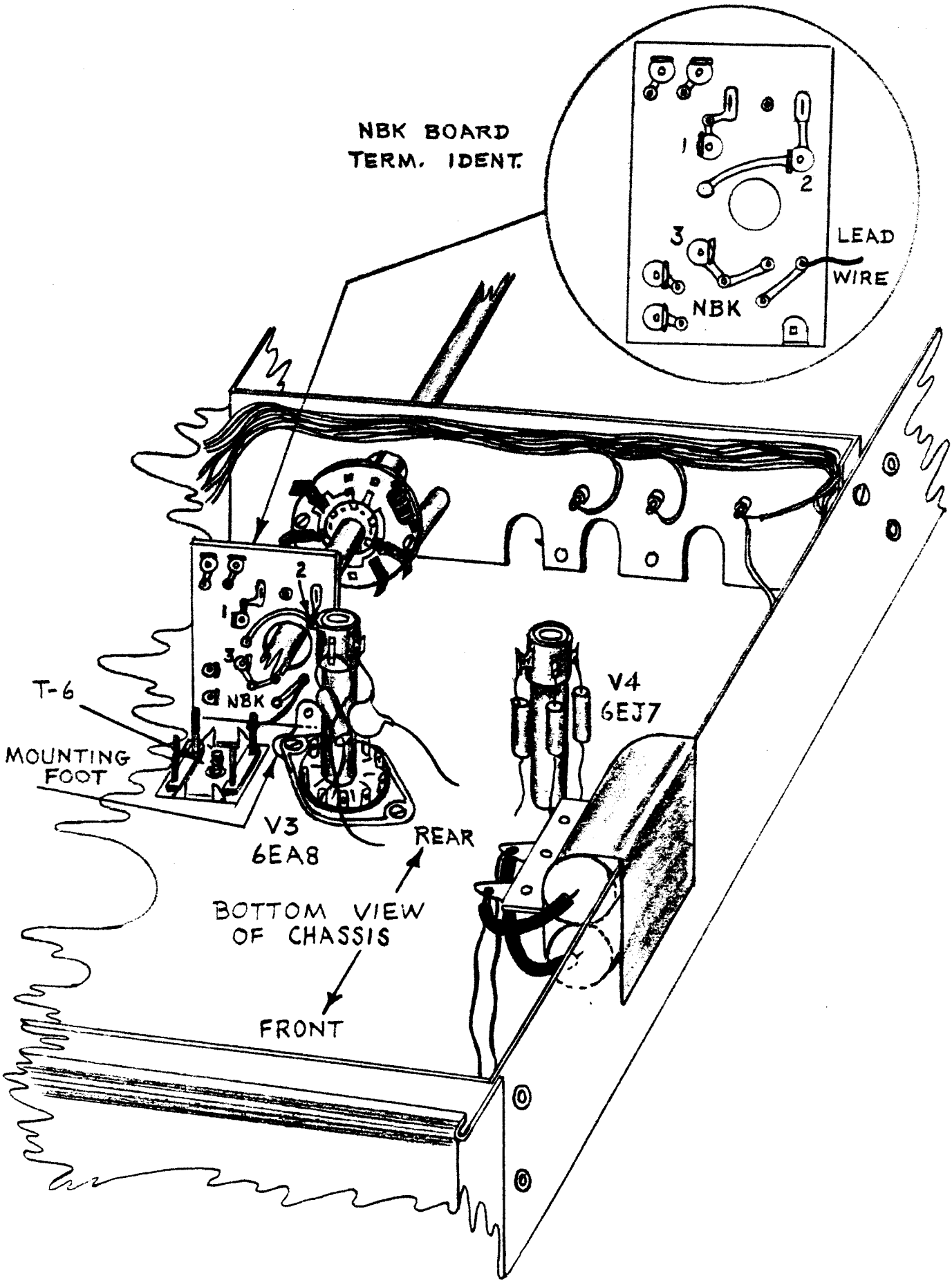

NBK BOARD, CAPACITOR-BRACKET ASSEMBLY LOCATION
FIGURE 2.

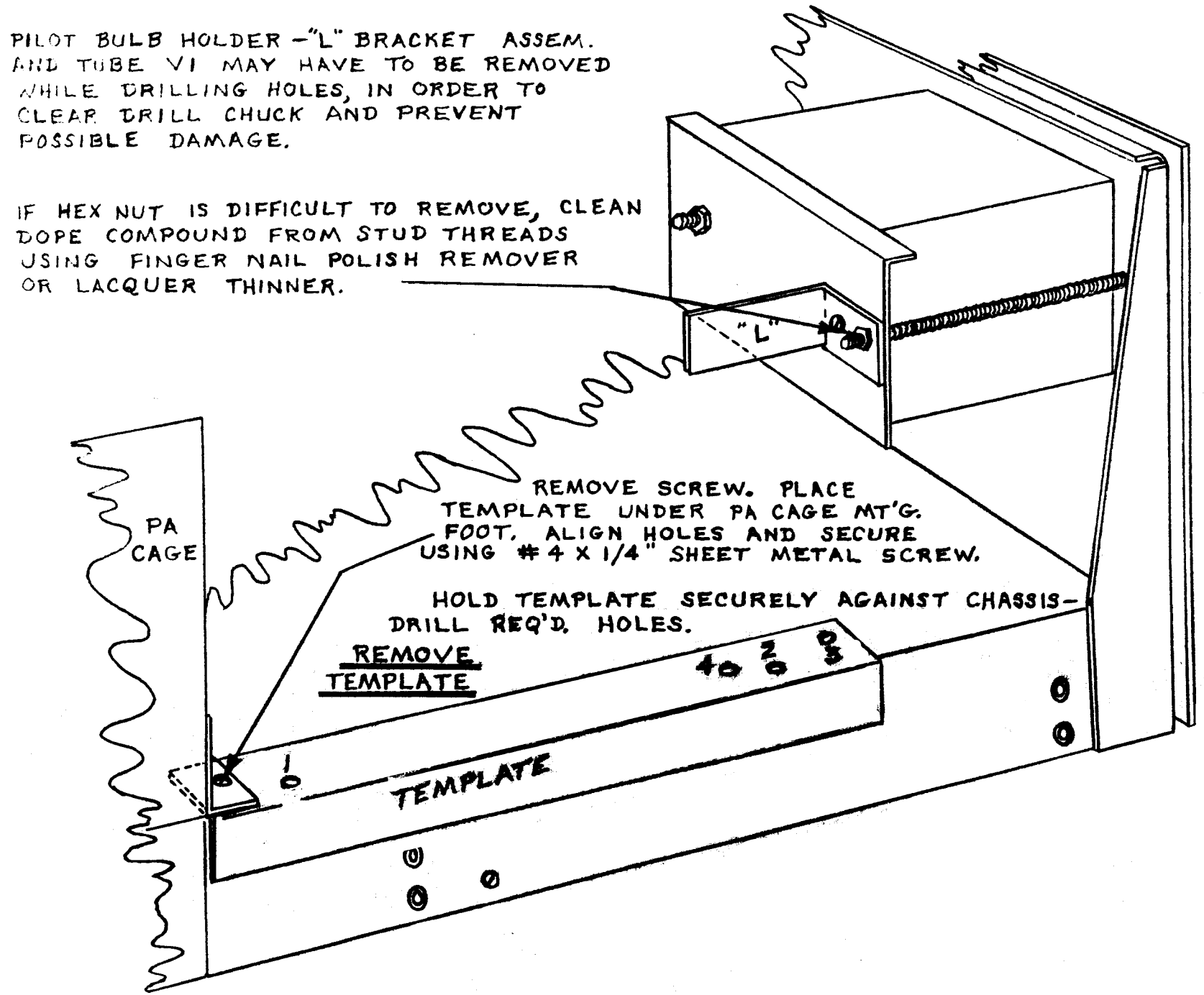

TEMPLATE LOCATION

FIGURE 3.

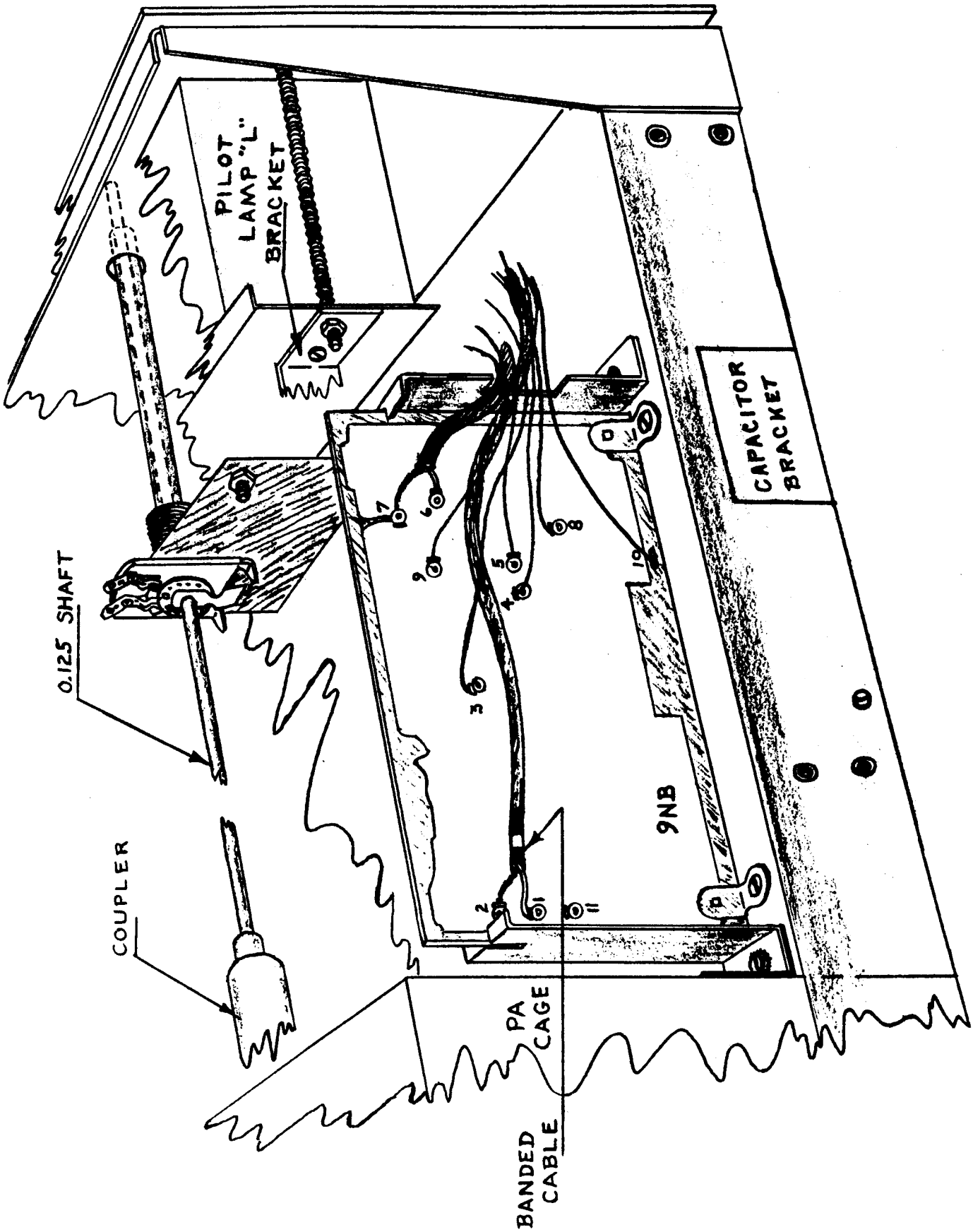

NOISE BLANKER BOARD – SWITCH ASSEMBLY
FIGURE 4.

Step 4. Refer to Figure #2. Remove the sheet metal screw from the mounting tab of tube V-3 socket. Place the NBK board mounting foot under the V-3 socket mounting tab (Note: It may be necessary to heat ground connection of 865 pf mica capacitor and stand this capacitor up-right. If so, fresh solder should be applied for a good connection). Wrap wire lead of the NBK board around the unused terminal of T-6 (terminal from which the resistor and capacitor were removed), and solder.

Step 5. Replace the sheet metal screw securing the NBK board and tube socket to chassis.

Step 6. Route the two coax cables through the main harness cut out (or chassis air holes) toward the meter case on top of the chassis.

Step 7. Turn the transceiver right side up. Place a piece of electrical tape around the metal portion of the tube socket for V-7 (12BA6). This piece of tape is a safety precaution against possible shorts between the socket and components contained on the 9-NB board. The board will be installed in a later step.

Step 8. Refer to Figure #3. Remove sheet metal screw from PA cage mounting foot, then loosen the remaining PA cage mounting screws (the remaining screws need not be removed). Place the template under the PA cage mounting foot, and along the top edge of the chassis, as shown. If a sheet metal screw protrudes through the chassis, preventing proper positioning of the template, remove the screw. Align the hole in the chassis and PA cage mounting foot with the hole in the template, as shown, and secure this end with a #4 x 1/4" sheet metal screw. Hold the template securely against the side and top of the chassis and drill hole numbers 1, 2, and 3 into the chassis using a #43 drill bit. If a screw had to be removed to properly position the template, drill hole #4 also. Remove the template from the chassis and retighten loose PA cage mounting screws.

NOTE: It is recommended that the pilot bulb assembly and tube V-1 be removed to allow clearance for the drill chuck and prevent possible damage.

Step 9. Refer to Figure #4. Mount the 9-NB board and brackets, using #4 sheet metal screws (it may be necessary to bend various resistors and/or capacitors, on the 9-NB board, to one side or the other in order for them to clear the previously taped metal portion of V-7 socket). The rear bracket mounts on top

of the PA cage mounting foot, as shown. If hole #4 was drilled, as outlined in Step 8, turn the transceiver upside down. The sheet metal screw, which was removed, loosened a terminal strip. Bend this terminal strip out of the way and secure the new AA-F Terminal strip to the chassis using previously drilled hole #4. Now transfer (unsolder and resolder) all leads from the old terminal strip to the new one, making sure they are connected exactly as before. A new choke (coil) is supplied, with ample lead length.

Step 10. Turn the transceiver right side up and remove "plate" tune knob and shaft.

Step 11. Refer to Figure #4. Mount the switch to the switch mounting bracket using the 3/8" lock washer and hex nut.

Slide the 1/8" shaft into the rear of the supplied switch assembly and through the 1/4" shaft.

Slide the 1/4" and 1/8" shafts through the plate tune hole in the sub panel and into the panel.

At the rear of the 1/8" shaft is a 1/4" flatted tube. Mate the two flats and push this tube into the coupler on the plate tune capacitor until flush.

Secure the switch assembly to the adjacent stud on the meter bracket with a lock-washer and a #6-32 nut. If the #6-32 nut is not easily threaded onto the stud, dope compound may be present in the stud threads. This can be removed using finger nail polish remover or lacquer thinner. If the stud turns when attempting to tighten the nut, hold the stud with pliers.

Step 12. Remove backing from metallic switch label and position exactly as shown in the cover photograph of this manual. Make your positioning exact because once contact is made with the panel, the label cannot be moved.

Step 13. While securely holding the 1/4" switch shaft with pliers, push the switch lever on the 1/4" shaft, mating the keyway with the proper slot on the shaft. Do not apply force to any other part of the switch.

Step 14. Place the new knob and phenolic knob insert on the 1/8" shaft and tighten the set screw.

Step 15. Turn transceiver upside down and install capacitor assembly as shown in Figure #2. The capacitor bracket may be located in any convenient location between the RCVR. GAIN control and V-4 socket.

C. ELECTRICAL

In wiring this unit, all wires will have to be cut to the necessary length and the insulation stripped off of each end. When routing wires from the bottom of the chassis to the top, two things should be kept in mind. A shorter path is desirable yet care should be taken to keep the wiring out of the immediate vicinity of tuned circuits. The selected path may be the main harness chassis cut out or chassis air holes. In following instructions, "(S)" means to solder all leads at a terminal and "(NS)" means not to solder at this time.

1. Solder the negative end of both 1000 mfd electrolytic capacitors to a nearby ground lug on a terminal strip or tube socket.

2. To each positive terminal, solder a 12" brown/white wire. Route both of these wires to the 9-NB board on top of the chassis.

3. Previously, a 1.5K resistor and .001 mfd. capacitor were disconnected from T-6. Disconnect the remaining leads of these two (2) components and remove the components from the transceiver and discard. Also, remove the short length of wire which connects a lug of T-6 to Pin 6 of V-3 (it is recommended this wire be cut loose at the tube pin end).

Note: A new .001 capacitor and 1.5K resistor with ample lead length are supplied.

<u>During the following wiring, keep in mind the brass slug in T-6 must be accessible for alignment, and clearance must be maintained for the band switch shaft</u>.

4. Connect the new 0.001 Z5U capacitor from Pin 2 of NBK (NS) to Pin 8 of V-3 (S). Refer to Figure #2.

5. Connect the new 1.5K, 1/2 watt resistor from Pin 2, NBK (S) to the terminal of the terminal strip where the previous 1.5K resistor was removed (S).

6. Connect a brown/white wire from Pin 1, NBK (S) to Pin 6 of V-3 (S).

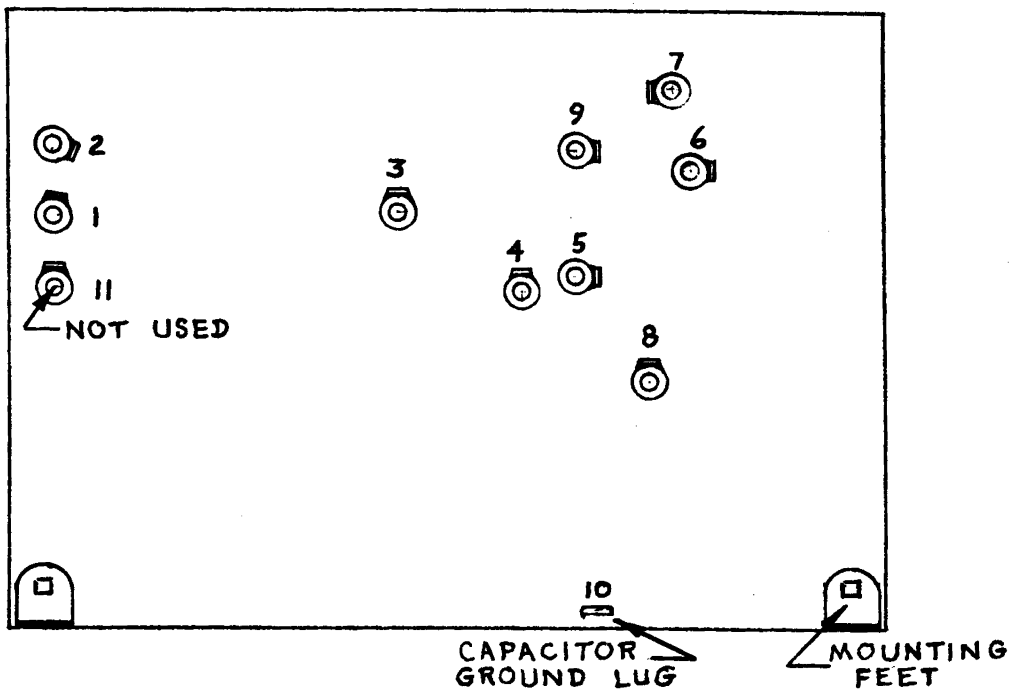

NOTES:

A. NUMBERS, EXCEPT 10, INDICATE SOLDER LUGS.
B. NUMBER 11 IS NOT USED.
C. DRAWING IS TO SCALE AND MAY BE USED AS TEMPLATE TO SIMPLIFY SOLDER LUG LOCATION.

PRINTED CIRCUIT SIDE - 9NB BOARD.

FIGURE 5.

7. Tie the remaining lug on T-6 to Pin 3 of the NBK board with a wire. Solder both ends.

8. Solder one of the two previously installed brown/white wires to Pin 9 of 9-NB and solder the remaining brown/white wire to Pin 4 of 9-NB. Refer to Figures #4 and 5.

9. From Pin 7 of V-7, a 100 ohm resistor connects to a lug on a near-by terminal strip. From that lug connect a yellow/white wire (S) and tie to Pin 3 of 9-NB (S).

10. From Pin 10 of 9-NB (S) run a brown/white wire to one of the "NB-OFF" switch terminals (S).

11. Run a red/white wire from the remaining switch terminal (S) to Pin 8 of 9-NB (S).

12. Run a white wire from pin #5 of 9-NB (S) to pin #4 of V-14 (NS). From pin #4 of V-14 to ground, connect the 0.01 mfd Z5U capacitor. Solder both capacitor connections.

13. Solder the shield of the banded cable to Pin 2 and center conductor to Pin 1 of 9-NB.

14. Solder the shield of the remaining cable to Pin 7 and center conductor to Pin 6.

15. Replace the band switch shaft, taking care to mate the double flatted shaft with the switch rotors. The shaft must be held parallel to the chassis. Do not force the shaft, these switches are delicate.

16. Secure the band switch shaft detent with #4 sheet metal screws, and replace the knob.

CAUTION

LETHAL VOLTAGES PRESENT WHEN RADIO IS OPERATING

Your 9-NB noise blanker board has been prealigned and should not require attention. If realignment is necessary, and the top of the power amplifier compartment is not covered (usually true of TR-3s), lethal voltage is easily accessible at the plate caps and parasitic suppressors.

A cardboard cover must be cut from the dotted lines on the inside of the 34-NB shipping carton. This cut-out should be placed inside the P.A. cage at the very top and secured in that position with tape. It prevents accidental contact with components which present the lethal 650 V plate supply during the alignment procedure.

THIS CARDBOARD COVER MUST BE REMOVED AFTER COMPLETING

V. ALIGNMENT

A. NBK BOARD

1. Tune in crystal calibrator on the 20 meter band.

2. Rotate RF tune until S-meter reads between S-3 and S-9.

3. Adjust the trimmer capacitor on the NBK board for maximum S-meter reading.

B. T-6 FILTER MATCH

1. For Transceiver Serial Nos. Below 26000:

   a. Tune in crystal calibrator signal at 4.0 MHz and adjust main tuning so that changing the "SIDEBAND" switch from the upper to lower sideband makes no difference in the S-meter reading.
   b. Turn "R.F." tune control counter-clockwise until S-meter reads no higher than S-3.
   c. Once again adjust main tuning until switching "SIDEBAND" knob between the X and non-X position makes no difference.
   d. With the "SIDEBAND" switch in its counter-clockwise position, adjust T-6 and T-13 for maxdmum S-meter reading.
   e. Repeat steps (a) through (d) for best results.
   f. Set the "FUNCTION" switch in the SSB position.
   g. Turn up the audio gain control until noise is easily audible in the speaker.

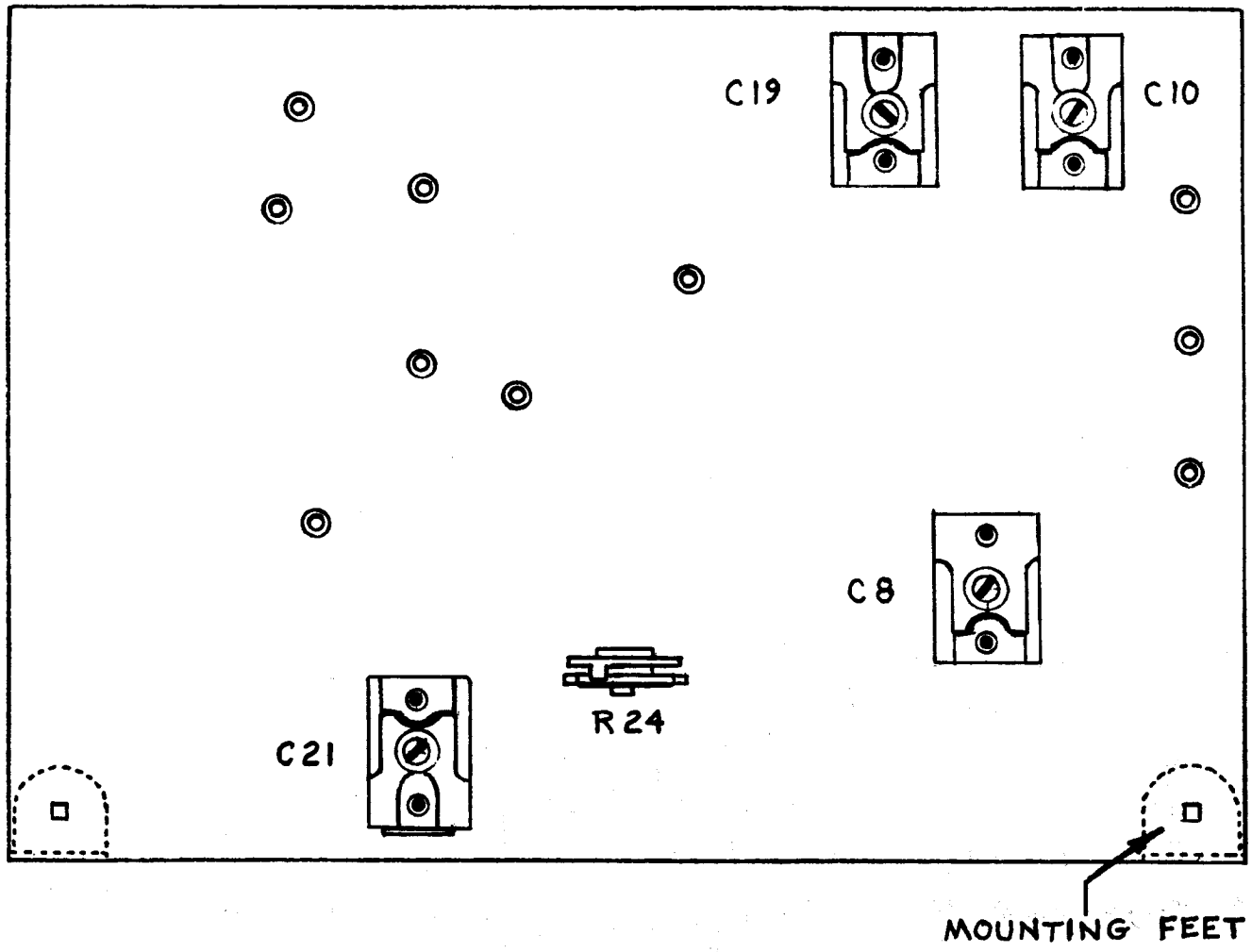

COMPONENT SIDE — 9NB BOARD — SHOWING LOCATION OF TRIMMER CAPACITORS AND POTENTIOMETER.

FIGURE 6.

h. While switching the "SIDEBAND" knob back and forth, adjust C-130, located on top of the chassis near the rear edge, until the pitch of the noise is the same in both positions.

2. For Transceiver Serial Nos. Over 26000:

a. Adjust "S-METER ZERO" pot for zero S-meter deflection (S-1).
b. With "SIDEBAND" switch in USB, tune in the calibrator signal at 4.0 MHz. for maximum S-meter reading.
c. Turn "RF TUNE" control until S-meter reads exactly S-5.
d. Turn the "MAIN TUNING CONTROL" clockwise to increase the audio frequency until the S-meter drops to S-3.
e. Adjust T-6 and T-13 for maximum S-meter reading.
f. Repeat steps (a) through (e) for best results.
g. Set the "FUNCTION" switch in the SSB position.
h. Turn up the audio gain control until noise is easily audible in the speaker.
j. While switching the "SIDEBAND" knob back and forth, adjust C-130, located on top of the chassis near the rear edge, until the pitch of the noise is the same in both positions.

C. 9-NB BOARD ALIGNMENT

Your noise blanker board has been pre-aligned and should not require attention. If for some reason you feel realignment is necessary, proceed as follows:

1. With the noise blanker turned on, adjust capacitor trimmers C_{10} and C_{19} for maximum S-meter reading on calibrator signal. (See Figure #6.)

2. With the calibrator turned off, connect a VTVM (set to measure D.C. Voltage) to terminal 8 of the 9-NB board and ground (terminal 8 being plus). Adjust R-24 for maximum positive voltage.

3. Turn the calibrator on and adjust the two remaining trimmers (C-21 and C-8) for minimum positive voltage.

Your 34-NB installation is now complete. Return to Page 3, "Operation"

If the system fails to operate satisfactorily, cause is likely to be a result of an error in installation. It is advisable to go through the installation instructions again and double check each step, at the same time checking for shorts, and all connections for cold solder joints.

If difficulty is still encountered, contact our Service Department giving a complete description of the malfunction. If necessary, return authorization will be given and the transceiver/noise blanker combinations will be serviced on a time and materials basis.

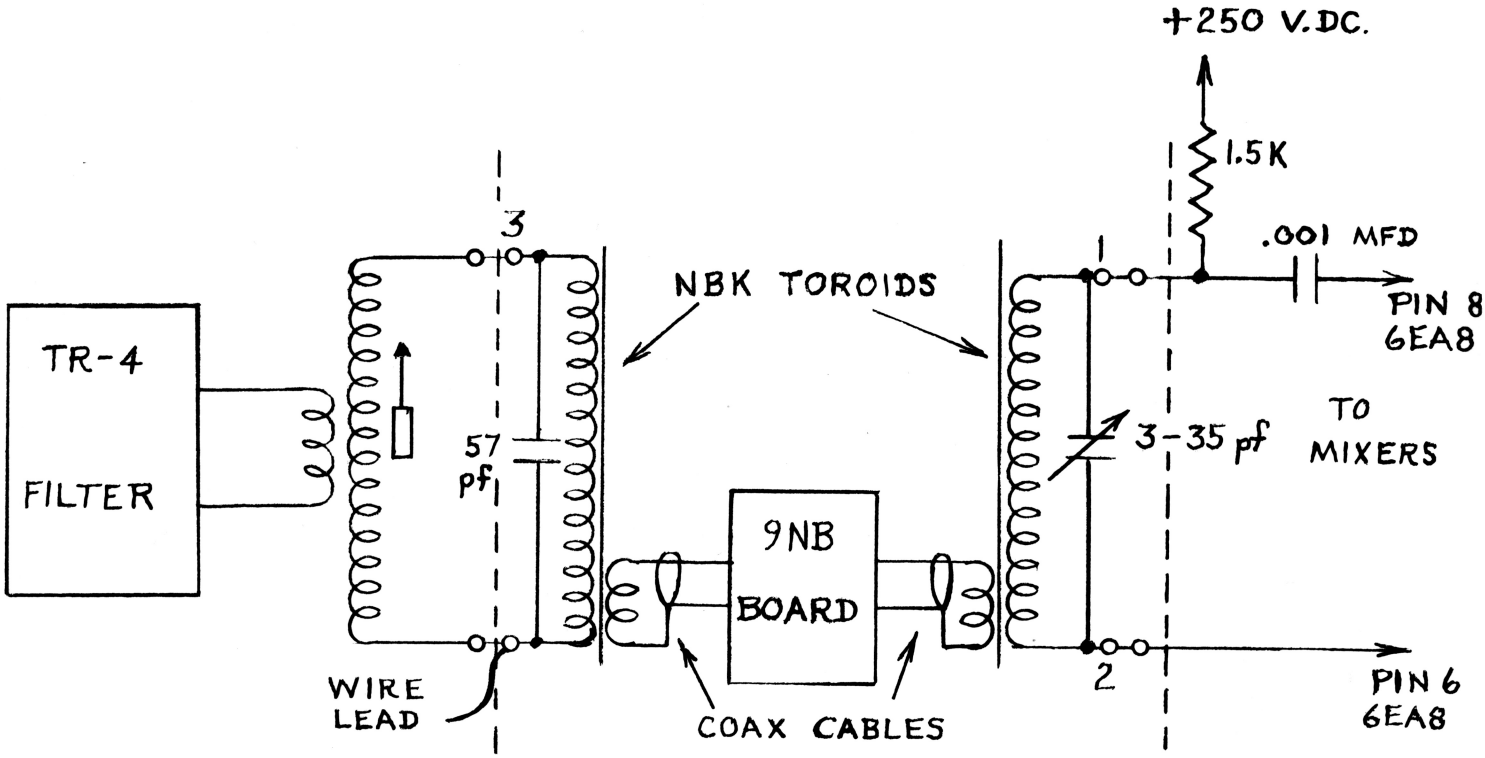

NBK BOARD SCHEMATIC

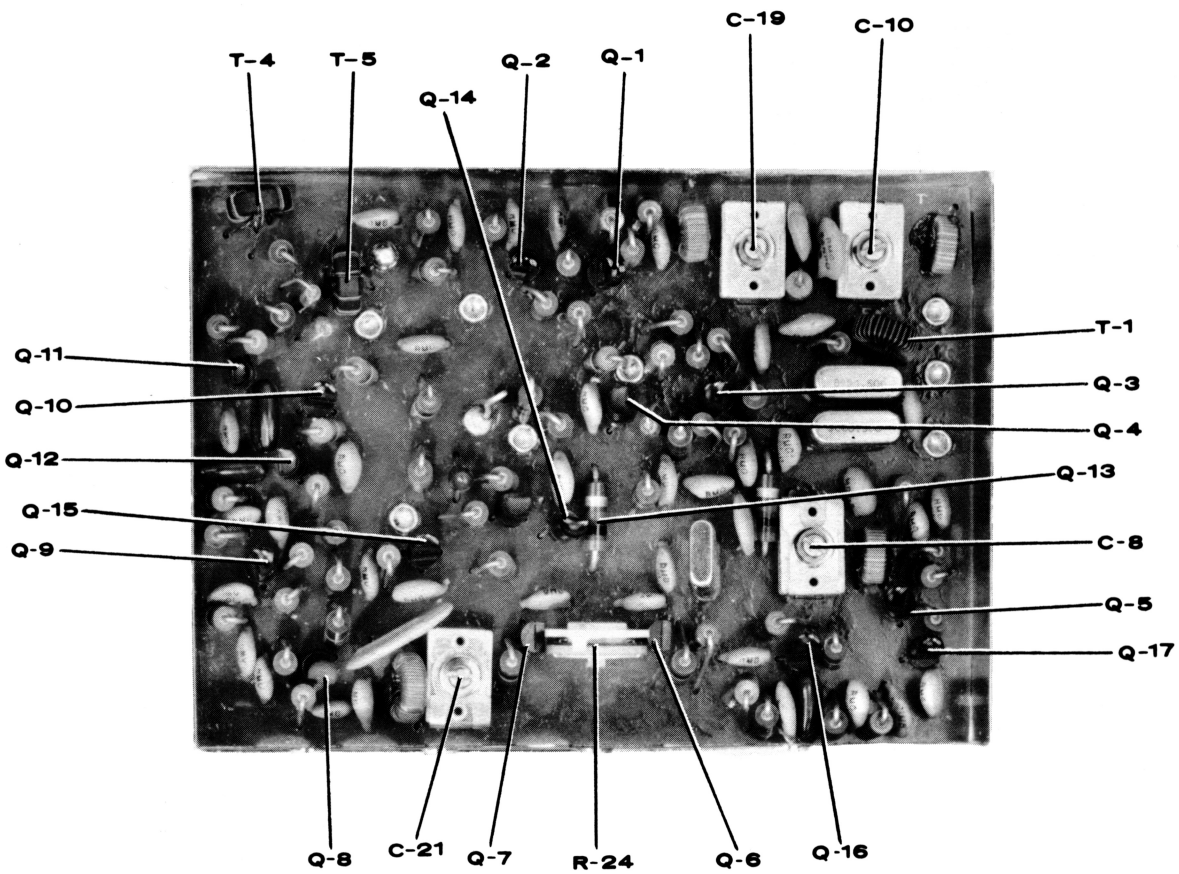

Fig. 2 - 9-NB board, component side

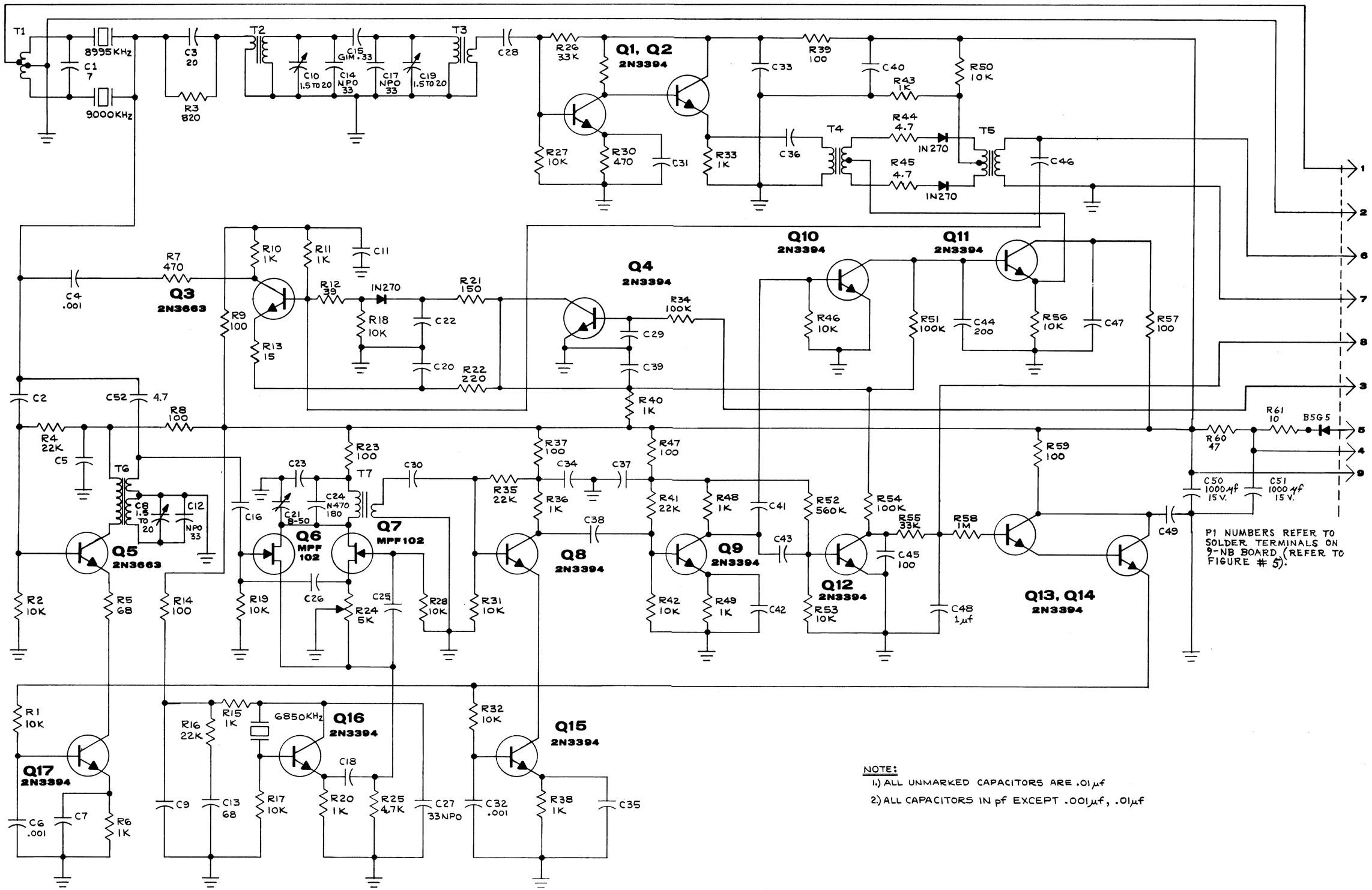

NOTE:

1.) ALL UNMARKED CAPACITORS ARE .01μf

2.) ALL CAPACITORS IN pf EXCEPT .001μf, .01μf