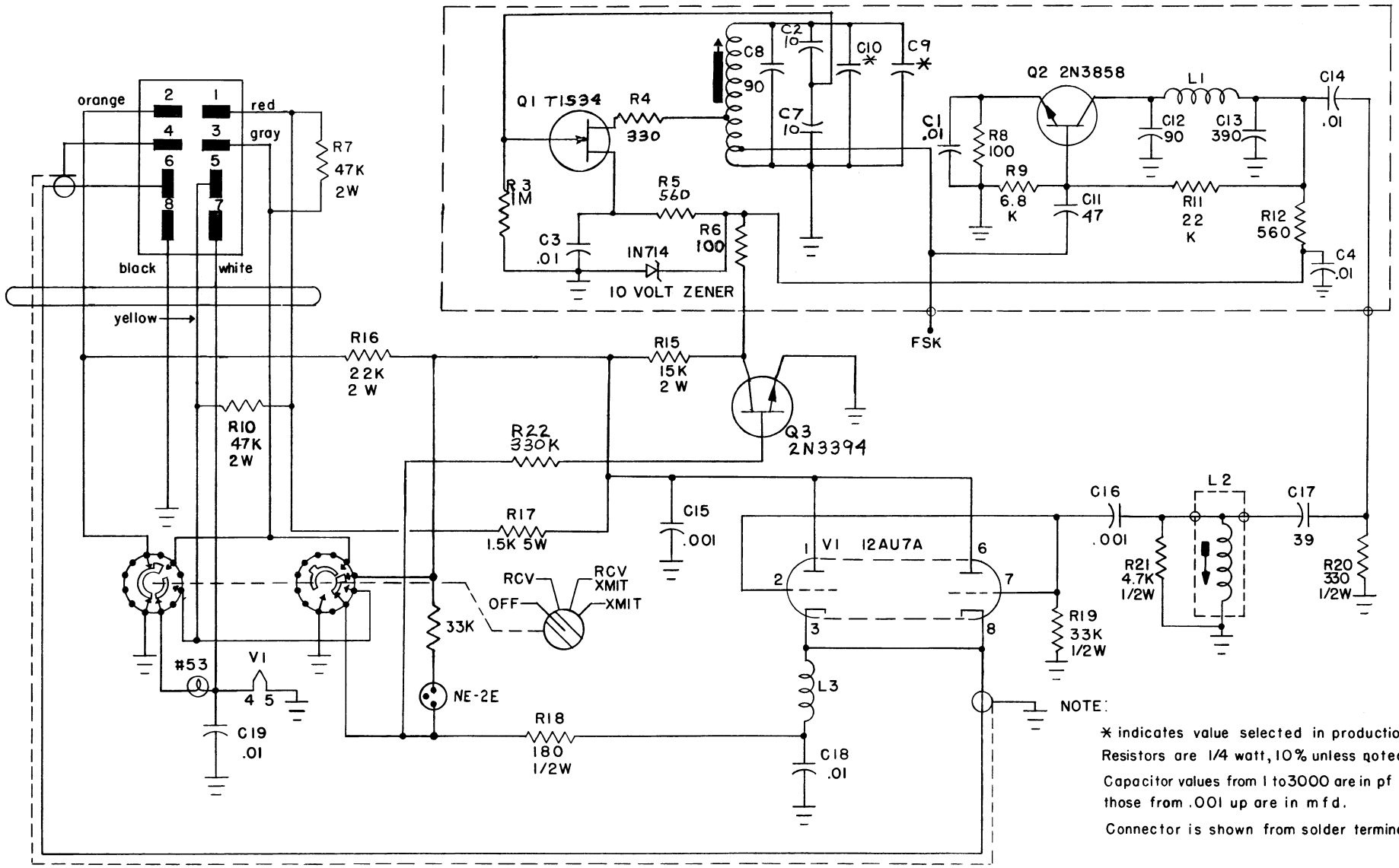

SCHEMATIC DIAGRAM MODEL RV-4 REMOTE VFO

CABLE WIRE COLOR SUBSTITUTIONS:
ORANGE IS NOW BLUE
GRAY IS NOW BROWN
YELLOW IS NOW GREEN