INSTRUCTION MANUAL

R. L. DRAKE • MODEL

TR-4

SIDEBAND TRANSCEIVER

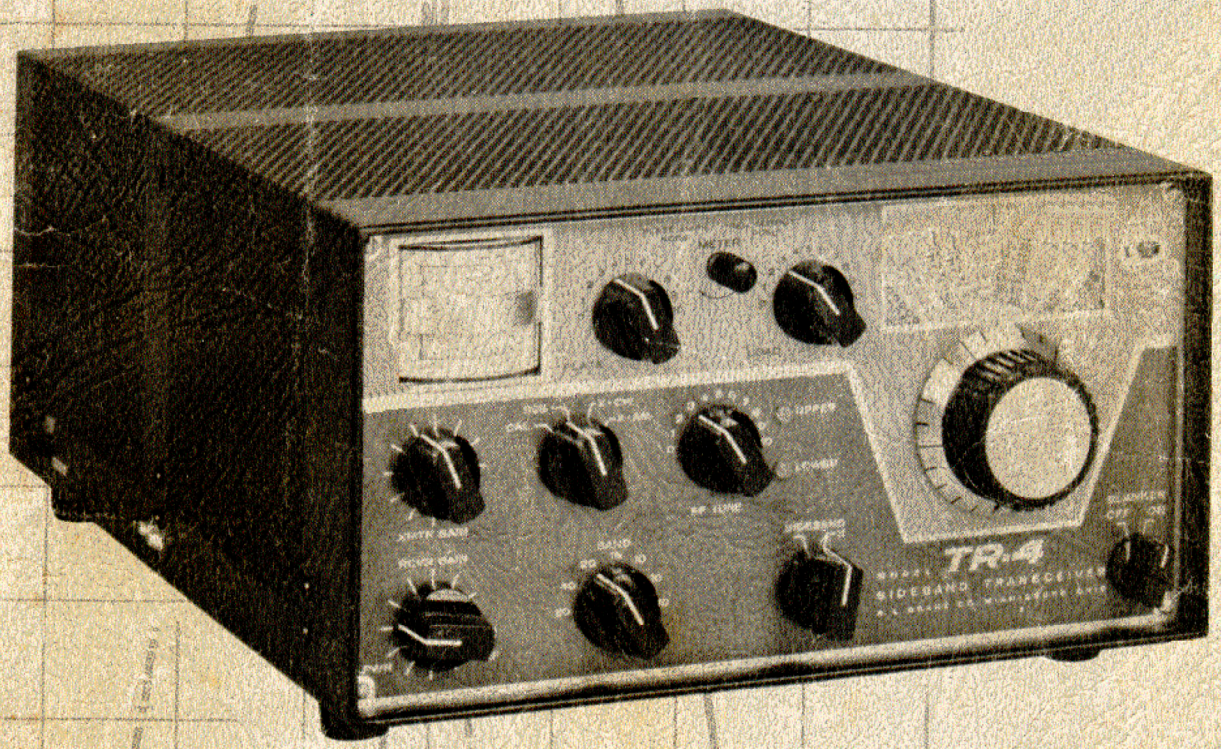

PRICE
$200

TABLE OF CONTENTS

General Specifications		3
Transmitter Specifications		4
Receiver Specifications		5
Power Supply Requirements		5
Tube Complement		5
I.	General Description	6
II.	Installation Instructions	7
	A. Unpacking	7
	B. Antenna Requirements	7
	C. Speaker Requirements	7
	D. Microphone Requirements	7
	E. Location	8
	F. Fixed Installation	8
	G. Mobile Installation	8
III.	Control Functions	14
	A. Front Panel Controls	14
	B. Side Controls and Jacks	16
	C. Rear Controls and Jacks	16
	D. Other	17
IV.	Tuning Procedure	18
	A. Bias Adjustment	18
	B. Adjusting Dial Calibration	18
	C. Tune-up on the Desired Band	18
	D. Adjustment of Carrier Balance Control	19
V.	Operation	21
	A. Voice Controlled Operation on SSB	21
	B. Push to Talk Operation on SSB	21
	C. CW Operation	22
	D. AM Operation	22
	E. General Precautions for Operation Near Band Edge	23
	F. Operation with Linear Amplifiers	23
VI.	Theory of Operation	25
	A. Receiver Circuitry	25
	B. Transmitter Circuitry	26
VII.	Service Data	30
	A. Removing Top Cover	30
	B. Removing Bottom Cover	30
	C. Tube Replacement	30
	D. Troubleshooting	30
VIII.	Alignment Instructions	35
	A. Crystal Calibrator Alignment	35
	B. Adjustment of 9.0 Mc Oscillator	35
	C. Crystal Oscillator Alignment	35
	D. VFO Adjustment	36
	E. Adjustment of Injection Couplers	36
	F. Receiving I.F. Alignment	36
	G. Adjustment of Bal. Modulator	36
	H. Filter Matching Transformer	37
	I. Carrier Balance Adjustments	37
	J. Adjustment of Mixer and RF Coils	37
	K. Final Amplifier Neutralizing	38
	L. Transmitter I.F. Neutralizing	38

IX. AC-4 Power Supply Instructions 39

X. DC-3 Power Supply Instructions 40

XI. RV-4 Remote VFO Instructions 42

XII. FF-1 Fixed Frequency Adapter 46

CHARTS AND ILLUSTRATIONS

Fig. # 1 Connecting the TR-4 to the AC-3 and MS-4 10
Fig. # 2 Connecting the TR-4 to the AC-3/AC-4 and to a linear amplifier 10
Fig. # 3 Using the TR-4 with an external receiver 11
Fig. # 4 Electrical connection for mobile installation of TR-4 11
Fig. # 5 Mechanical details for mobile installation 12
Fig. # 6 Viewing Angle Options 13
Fig. # 7 Rear View 17
Fig. # 8 Side View 20
Fig. # 9 Attenuation for using TR-4 with Linear Amplifier 24
Fig. # 10 Block Diagram and selectivity curves 29
Fig. # 11 Resistance Chart 31
Fig. # 12 Voltage Chart 32
Fig. # 13 Top View 33
Fig. # 14 Bottom View 34
Fig. # 15 AC-4 Schematic Diagram 39
Fig. # 16 DC-3 Schematic Diagram 41
Fig. # 17 RV-4 Schematic Diagram 45
Fig. # 18 FF-1 Mounted View 46
Fig. # 19 FF-1 Schematic 47
Fig. # 20 TR-4 Schematic (End Fold Out)

GENERAL SPECIFICATIONS

FREQUENCY COVERAGE: Full coverage on all amateur bands 10 thru 80 meters, in seven 600 kc ranges: 3.5 to 4.1 mc, 7.0 to 7.6 mc, 13.9 to 14.5 mc, 21 to 21.6 mc, 28 to 28.6 mc, 28.5 to 29.1 mc, 29.1 to 29.7 mc.

SOLID STATE VFO: Has linear permeability tuning. Tunes 4.9 to 5.5 mc for all ranges.

DIAL CALIBRATION: 10 kc divisions on main tuning dial and 1 kc on tuning knob skirt. Effective length of circular dial scale is over 14 inches.

FREQUENCY STABILITY: High stability solid state VFO tunes same range on all bands. Overall drift is less than 100 cycles after warm-up, and less than 100 cycles for plus or minus 10% line voltage change.

MODES OF OPERATION: SSB (Upper or Lower Sideband), CW, and AM.

FRONT PANEL CONTROLS:
Main Tuning has fluted knob with adjustable 25 division skirt. Tunes VFO and rotates main dial.
RF Tune tunes the RF circuits common to receiver RF amplifier and transmitter driver stages. 0-10 scale.
Plate and Load tuning adjust pi-network capacitors in transmitter for proper resonance and loading on each band.
Band switch selects desired ham band (see frequency coverage).
Function switch has four positions; CAL, SSB, X-CW, X-AM. CAL operates built-in 100 kc crystal calibrator for accurate setting of main tuning hair line indicator and knob skirt. SSB provides SSB operation, either VOX or PTT. X-CW provides for CW operation with automatic transmit receive switching and CW sidetone, and is used for tune up. X-AM provides controlled carrier AM operation with VOX or PTT, and with diode detector for receiving.
XMTR GAIN functions as mike audio gain on SSB and AM, and as carrier injection control on CW.
RCVR GAIN knob controls receiver AF gain and power ON-OFF switch. Lever behind knob controls setting of RF gain.
SIDEBAND switch in conjunction with indicator lights marked "Upper" and "Lower" selects desired sideband by connecting into the circuit either the upper or lower sideband filter. ("X" postion used when in "X-CW" or "X-AM" positions of Function Switch.)

OUTPUT METER CONTROL switch converts plate meter to read relative output, when pushed. Rotating varies output meter sensitivity.

RIGHT SIDE SCREWDRIVER ADJUST CONTROLS: Vox Gain, Anti Vox Gain, S-Meter Zero.

RIGHT SIDE JACKS: Headphone (disconnects speaker circuit), Microphone (3-circuit for PTT), Key (normally closed).

REAR CONTROLS: Sidetone (adjusts sidetone volume), Lights (for dimming dial lights).

REAR JACKS: Power (connects TR-4 to power supply and speaker), RCVR MUTE (for muting an external receiver), RCVR ANT (Uses TR-4 ant. relay to connect an external receiver to the antenna), Antenna (for connecting the TR-4 to the antenna).

LEFT SIDE CONTROLS: TCVR/RCVR switch (for selecting between the use of the TR-4 or an external receiver for receiving).

INSIDE CONTROLS: Carrier balance.

METERS: Receiver S-Meter/transmitting AGC indicator, and transmitter Plate Ammeter/ relative R.F. output indicator.

MISC: 20 tubes including voltage regulator; two transistors; nine diodes; 100 kc crystal calibrator built in; Dimensions: 5 1/2" high, 10 3/4" wide, 14 3/8" deep. Weight: 16 lbs.

TRANSMITTER SPECIFICATIONS

SINGLE SIDEBAND: 300 watts P.E.P input power, VOX or PTT. Two special 9 mc crystal filters provide upper or lower sideband selection on any band, without the necessity of shifting oscillators. Unwanted sideband suppression of more than 60 db and carrier suppression of 50 db. Overall audio frequency response 400 to 2500 cycles at 6 db down. Distortion products 30 db down at maximum output.

CW: Power input 260 watts. Carrier is shifted approximately 1000 cycles into one sideband, and mixer and driver are keyed. Grid block keying is free from chirps and is properly shaped to minimize clicks. Automatic transmit/receive switching when key is operated. CW sidetone oscillator for monitoring.

AM: Controlled carrier AM screen modulator is built-in. 260 watts P.E.P. input. Low carrier power increases 6 times to 50 watts output at maximum modulation. This system is compatible with SSB linears. VOX or PTT. Diode detector used for receiving on this mode. Product Detector can be used by switching manually.

OUTPUT IMPEDANCE: Nominal 50 ohms, adjustable with pi-network.

MICROPHONE INPUT: High-impedance.

RECEIVER SPECIFICATIONS

SENSITIVITY: Less than 1/2 microvolt for 10 db S+N/N.

I. F. SELECTIVITY: 2.1 kc at 6 db, 3.6 kc at 60 db.

AGC: Full AGC on received modes. Audio output varies less than 3 db for 60 db change in signal level. Any amount of AGC from zero to full can be had by adjustment of RF gain control. Time proven Drake AGC system provides fast attack and slow release with noise pulse suppression, No pumping or popping evident.

ANTENNA INPUT: Nominal 50 ohms.

AUDIO RESPONSE: 400 to 2500 cycles at 6 db.

AUDIO OUTPUT POWER: 2 watts.

AUDIO OUTPUT IMPEDANCE: 4 ohms.

POWER SUPPLY REQUIREMENTS

Due to the 300 watt P.E.P. input rating, the TR-4 will require a power supply capable of low voltage at high current with very good dynamic regulation. The voltage and current requirements are as follows:

1. 650 volts at 300 ma average and 500 ma maximum with 10% regulation from 100 ma to 500 ma and maximum ripple of less than 1%.
2. 250 volts at 175 ma with 10% regulation from 150 ma to 180 ma. This includes the effect of the 650 volt supply change if both voltages are obtained from the same transformer. Maximum ripple must be less than 1/4%.
3. -45 to -65 VDC adjustable filtered bias into 33 K ohm load.
4. 12.6 Volt AC or DC at 5.5 amps.

TUBE AND TRANSISTOR COMPLEMENT	FUNCTION	
	Transmitter	Receiver
12AX7	Mike Amp.	----------
6EV7	Vox Amp/Relay	----------
6GX6	9 MC Xtal Osc.	BFO/Prod. Det.
12BA6	I.F. Amp.	----------
12BA6	----------	I.F. Amp.
12BZ6	----------	I.F. Amp.
12AX7	AGC	AGC
6AQ5A	Anti-Vox	Audio Output
~~6HS6~~ 6ES7	Mixer	----------
6EA8	Cathode Fol.	Mixer/Cath. Fol.
6EA8	Pre-Mixer/Xtal Osc.	Pre-Mixer/Xtal Osc.
12AV6	Sidetone Osc.	Diode det/1st AF amp
13DE7	AM Screen Mod.	----------
12BA6	----------	R.F. Amp.
12BA6	----------	Crystal Calib.
12BY7	Driver	----------
(3) 6JB6 Matched	Power Amps.	----------
OA2	Voltage Reg.	Voltage Reg.
2N3394	VFO	VFO
2N3394	VFO Buffer	VFO Buffer

I GENERAL DESCRIPTION

The R.L. Drake model TR-4 is a single sideband transceiver designed for the transmission and reception of upper and lower sideband signals on the 80 through 10 meter amateur bands. AM and CW capabilities are included.

Its compact size makes it ideal for both fixed station use in conjunction with our model AC-3 120 volt AC Power Supply, or for mobile installations using our model DC-3 12 volt DC Power Supply.

The 300 watt P.E.P. input on SSB enables the TR-4 to give an excellent account of itself "barefoot" and it will drive the highest powered ham linear amplifiers.

Upper and lower sideband selection is accomplished by switching between two 9 mc crystal lattice filters with 2.1 KC passbands. Among the other features included on the TR-4 are VOX and PTT on SSB and AM, diode detection for AM, shifted carrier CW, automatic transmit receive switching on CW, built in CW sidetone, separate RF and AF gain controls, solid state VFO with linear permeability tuning, transmitting and receiving AGC indicator and plate ammeter/RF output indicator, adjustable pi-network output, and built in crystal calibrator.

The addition of the accessory RV-4 remote VFO speaker combination enables the operator to receive, transmit, or transceive throughout the band being used without disturbing the setting of the TR-4 tuning dial. This is useful for working DX stations operating outside the United States phone bands, or for working near your own frequency in search of a clear spot under crowded band conditions.

The accessory FF-1 is a fixed frequency adapter useful wherever crystal controlled operation is desired. It provides two switch selected channels and allows "off", crystal controlled "transmit" only or "transceive" operation.

II INSTALLATION INSTRUCTIONS

A. UNPACKING:

Carefully remove your TR-4 from its packing carton and examine it closely for signs of shipping damage. Should any be apparent, notify the delivering carrier immediately, stating the full extent of the damage.

Fill out and mail the enclosed registration card so that your warranty will be effective.

Save the packing material. You may need it later for reshipment or storage.

Inspect the packing material closely before putting it away to be sure you have not overlooked the Switchcraft type S-230 and 229 plugs and other hardware shipped with the TR-4.

B. ANTENNA REQUIREMENTS:

The TR-4 is designed for use with antennas resonant on the operating frequency and having approximate impedances of from 30 to 100 ohms. The SWR should be 2:1 or less. Although there are many types of antennas which will meet this requirement, the simplest is a one half (1/2) wave dipole, center fed with 52 ohm coax. For a detailed discussion on antennas, we suggest you refer to the ARRL Antenna Book or The Radio Amateur's Handbook.

Antenna connection to the TR-4 is provided at the SO-239 coax connector located on the rear of the shielded compartment housing the final amplifier components.

CAUTION: NEVER ATTEMPT TO OPERATE THE TR-4 WITHOUT FIRST CONNECTING IT TO AN ANTENNA OR 52 OHM DUMMY LOAD OF SUFFICIENT POWER HANDLING CAPACITY OR SERIOUS DAMAGE CAN RESULT.

C. SPEAKER REQUIREMENTS:

A good quality 4 ohm speaker should be connected to terminals 7 and 12 of the female power plug mated to the TR-4, or plugged into the phone jack on the side. If our model AC-3 or DC-3 power supplies are used, a 6-inch lead terminating in a female phono plug is attached to these terminals of the power plug on the end of the power cable. Our model MS-4 speaker, available from your dealer, provides a very good match and is compatible in appearance with the TR-4. It will also house the Model AC-3, 120 VAC power supply.

D. MICROPHONE REQUIREMENTS:

A microphone with a wide and flat frequency response will enable you to obtain peak performance from your TR-4. For good VOX (voice control) operation, it is desirable for the mike to have a cardiod pattern to reduce pickup from the back

and sides. This enables you to operate with higher receiver audio gain, giving better VOX operation and reducing echoes, reverberation, and noise pickup in the fixed or mobile installation. Microphones with limited low or high frequency response and with peaks in the voice range should be avoided.

A three conductor microphone plug (Switchcraft type S-230) is provided with the TR-4. The microphone must be connected as shown here for proper VOX and push to talk operation. Many microphones that are furnished with a switch are wired so that the microphone cartridge is open or short circuited unless the switch is depressed. This function must be defeated or VOX operation will be impossible.

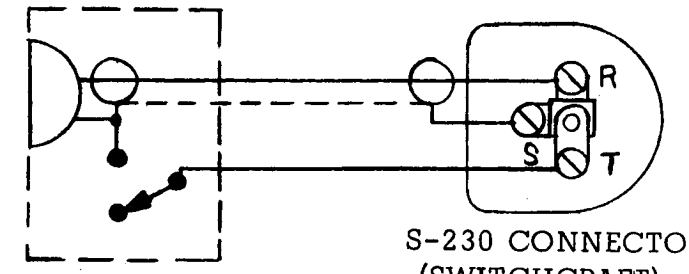

MICROPHONE

S-230 CONNECTOR
(SWITCHCRAFT)

E. LOCATION:

In general, the location of the TR-4 is not critical, either in fixed or mobile installations. However, care should be taken to insure that space is allowed around the unit to allow adequate air circulation. Extremely hot locations, such as near radiators or heating units, should be avoided. Do not cover the top of the TR-4 with books, papers, or pieces of equipment or overheating may result.

F. FIXED INSTALLATION:

For fixed installation, our model AC-3 120 VAC 50/60 cycle power supply will be required and the model MS-4 matching speaker is highly desirable. Connect these units as shown in figure 1. Note that the AC-3 power supply will fit inside the MS-4 to form one compact unit. Figure 2 shows how the TR-4 can be connected for operation with linear amplifiers. If you use a linear amplifier which has ALC output, it can be applied to the TR-4 at pin 3 of the power connector. The use of shielded wire is recommended.

G. MOBILE INSTALLATION:

The TR-4 may be installed in any vehicle having a 12 VDC electrical system. Our model DC-3 power supply will be required for this installation. All DC-3 supplies are factory wired for negative ground systems.

IF YOUR CAR HAS A POSITIVE GROUND SYSTEM, DO NOT ATTEMPT TO CONNECT THE DC-3 OR SERIOUS DAMAGE WILL RESULT.

1. Mount the TR-4 in a convenient location under the dash using the MMK-3 mobile mounting kit. See Figure 5 for more detailed instructions on various suggested mounting methods. Be sure to allow adequate clearance for air circulation and at the right side for access to the screw driver adjustments and the mike jack.

2. The recommended mounting position for the DC-3 power supply is on the passenger side of the firewall. We do not recommend that it be placed in the trunk due to the excessive primary lead length or in the engine compartment unless it is protected from water and engine heat.

   Make sure that the on-off switch on the TR-4 is in the off position, (audio gain fully counter clockwise until click is heard), and connect the female power connector on the end of the power cable to the TR-4. Coil up excess cable and tape in an out-of-the-way location. You may need the extra length when you trade cars. Run the black wire from the power supply to a convenient ground and run the red wire through the fire wall to the battery terminal of the starter relay. Shorten the heavy red and black wires as much as possible.

3. Install a mobile antenna in the manner recommended by the antenna manufacturer and connect the coax lead from it to the SO-239 connector of the TR-4. It may be necessary to install a matching coil at the antenna feed point in order to match it to the feed line impedance. (See Figure 4) The use of an SWR bridge is recommended. For details on this, refer to the mobile antenna section of the ARRL Radio Amateur's Handbook.

4. If your car has a transistor radio, we suggest you install a separate speaker for use with the TR-4. However, if the radio in your car has a vacuum tube audio amplifier, and if one side of its speaker is grounded, run a wire from the ungrounded terminal to the center conductor of a male phone plug. Insert this plug in the female jack molded into the end of the 6 inch wire protruding from the connector on the end of the DC-3 power cable. It should be unnecessary to disconnect the auto radio output transformer when the TR-4 is used, unless it has insufficient volume. If this proves to be the case, a SPDT switch can be installed so that the speaker lead goes to the pole, the car radio output goes to one contact and the TR-4 output goes to the remaining contact.

5. If ignition noise is a problem, we recommend the installation of resistor type spark plugs, a 10,000 ohm suppressor resistor inserted in the center tower of the distributor and 5000 ohm suppressor resistors at each spark plug tower on the distributor. Install a coaxial capacitor at the ignition coil primary as close to the coil terminal as possible.

   To suppress generator noise, install another coaxial capacitor (.1 to .25 MFD) in the generator output lead as close to the output terminal as possible. To suppress voltage regulator noise, install bracket mounted coaxial capacitors at the generator output and battery leads to the voltage regulator. Mount the capacitors as close to the regulator as possible. A .002 MFD mica capacitor with a 4 ohm carbon resistor in series should be connected from the generator field terminal of the regulator

to ground. Do not use a capacitor across the field contacts without a resistor in series or the regulator life will be greatly shortened! For additional information on noise suppression, consult the mobile noise suppression section of the ARRL Radio Amateur's Handbook.

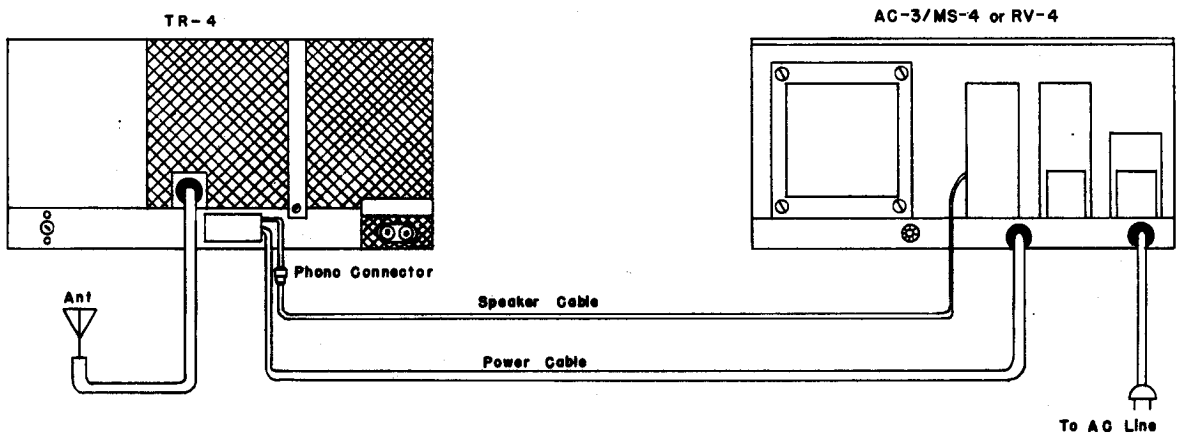

FIG. 1 CONNECTING THE TR-4 TO THE AC-3 POWER SUPPLY AND MS-4 MATCHING SPEAKER

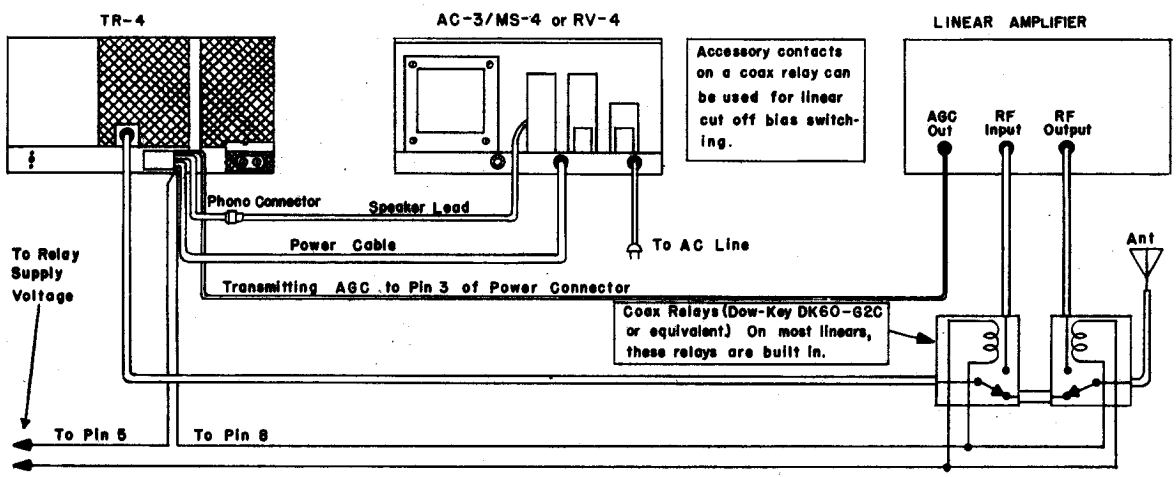

FIG. 2 CONNECTING THE TR-4, MS-4, AND AC-3 TO A LINEAR AMPLIFIER

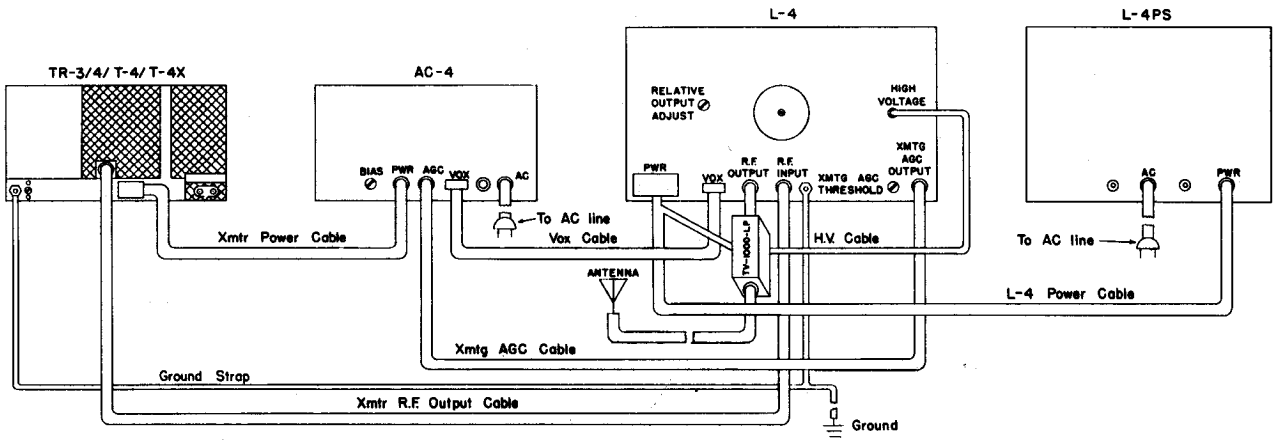

FIG. 2.1 CONNECTING THE TR-3/TR-4/T-4/T-4X AND AC-4 TO THE L-4 LINEAR AMPLIFIER

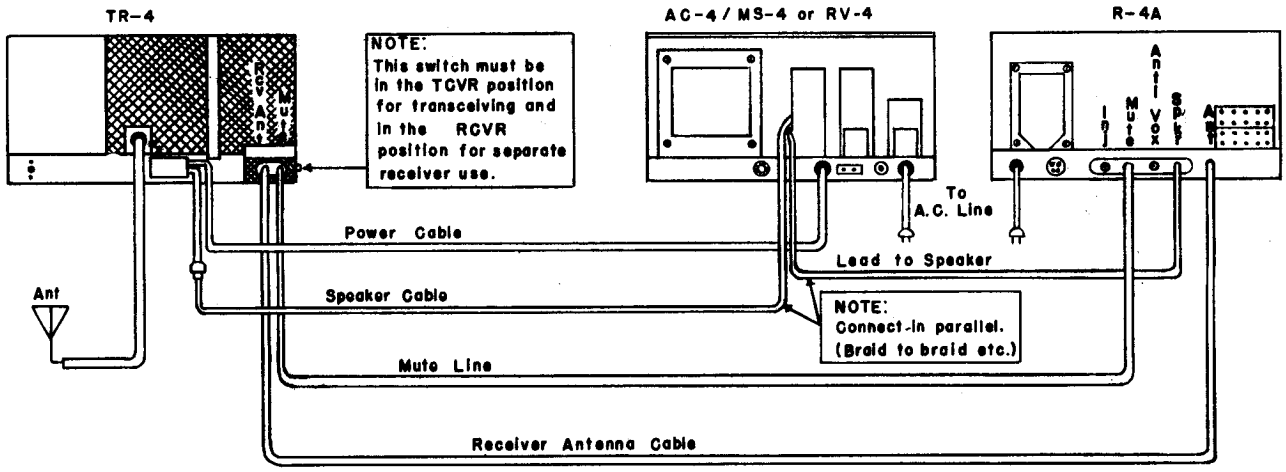

FIG. 3 USING THE TR-4 WITH AN EXTERNAL RECEIVER

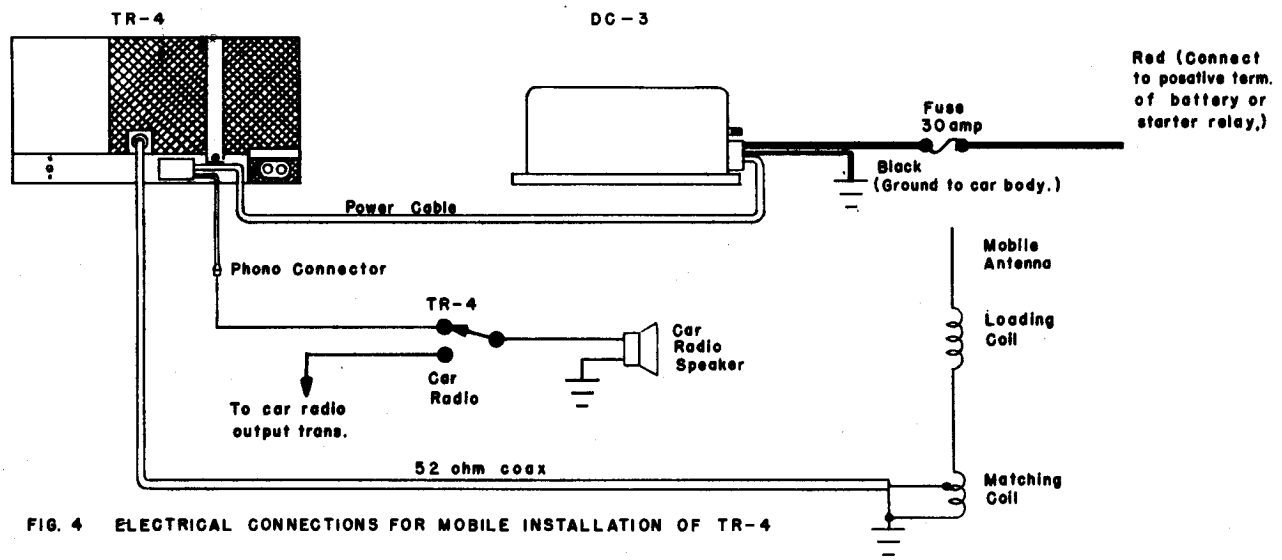

FIG. 4 ELECTRICAL CONNECTIONS FOR MOBILE INSTALLATION OF TR-4

Fig. 5 MECHANICAL DETAILS OF MOBILE INSTALLATION USING MMK-3 MOBILE MOUNTING KIT

Four threaded holes are provided in each side of the TR-4 top cover to accept wing bolts, and four punched holes are provided at the rear edge of the bottom cover for mounting of the tongue. (four 6-32 screws and nuts provided). The tongue holder can be mounted to the floor or transmission hump by drilling two 3/16-inch holes and fastening it down with the two #14 sheet metal screws provided. Note that two fibre washers are provided which must be positioned between the TR-4 case and the mounting bracket. These washers are not shown.

The mounting bracket may be attached to the dash either with the two #14 sheet metal screws or the 1/4-inch bolts and nuts (both sets provided). Additional holes may be drilled in bracket to match existing holes in the dash.

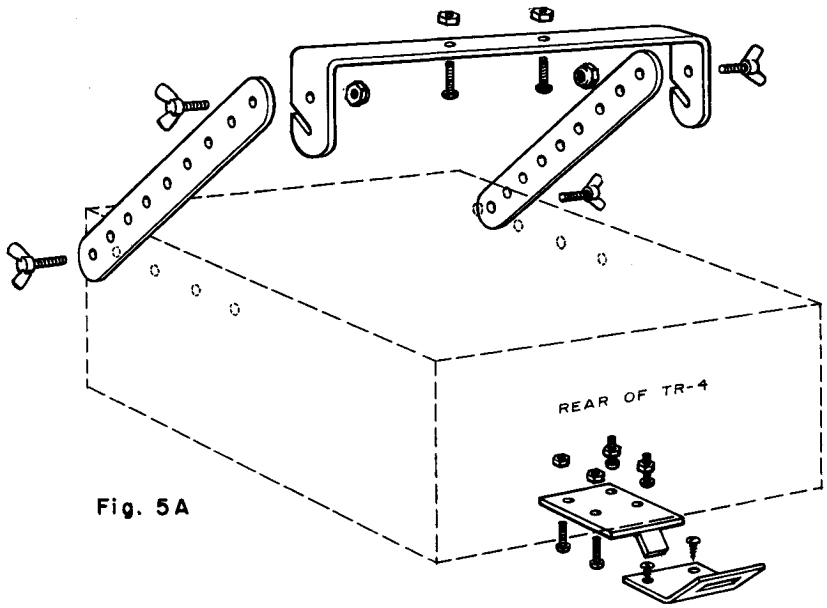

Fig. 5A

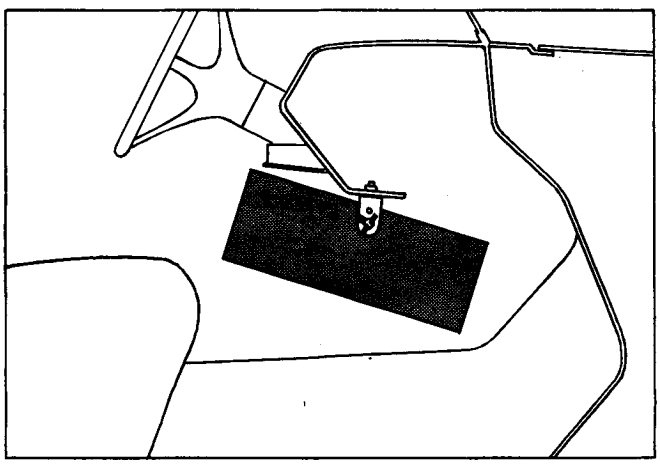

Fig. 5B

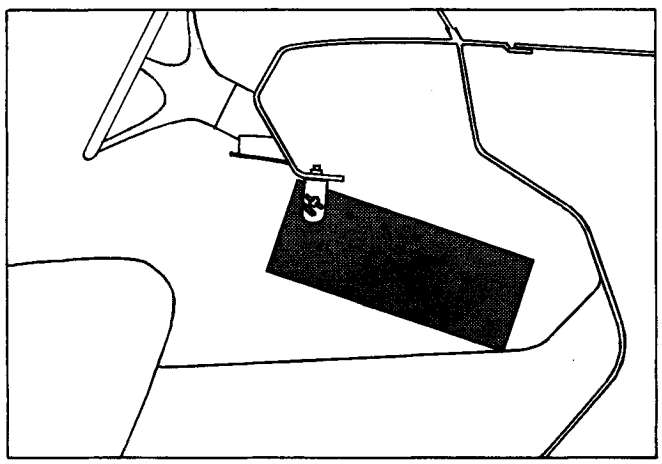

Fig. 5C

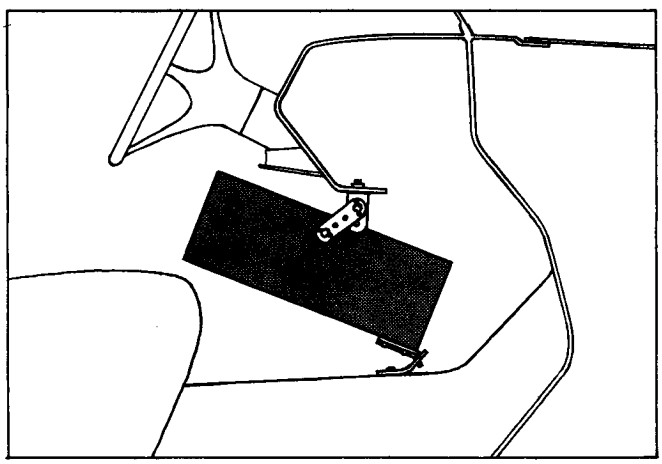

Fig. 5D

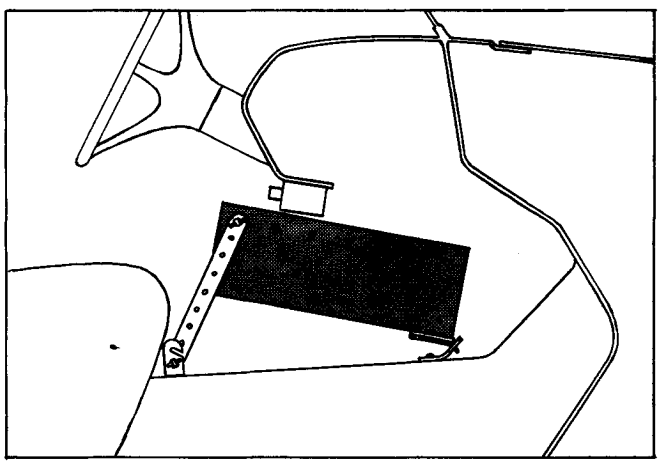

Fig. 5E

VIEWING ANGLE OPTIONS

Fig. 6

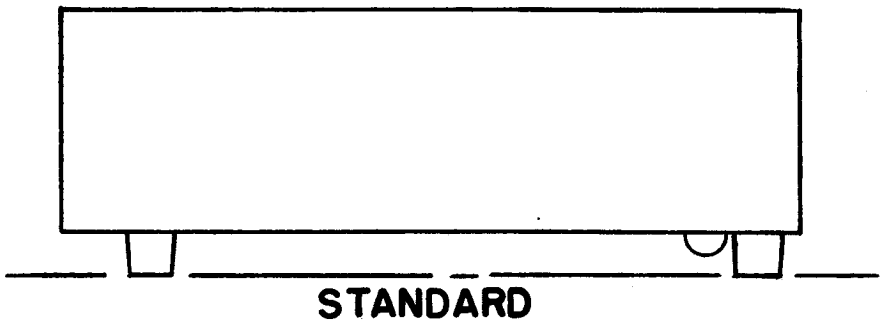

STANDARD

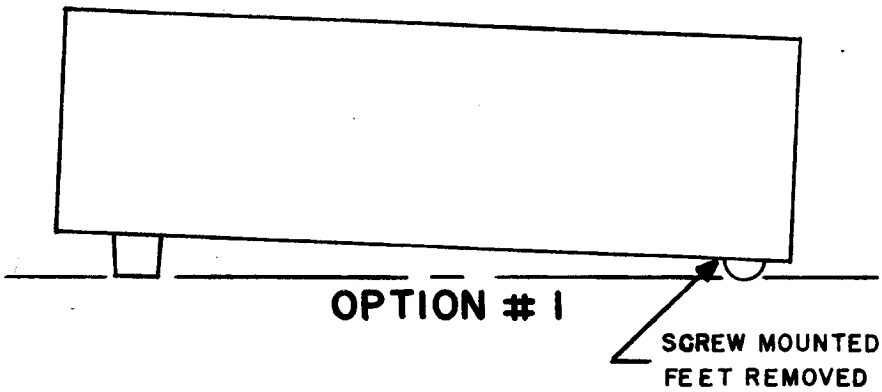

OPTION # 1

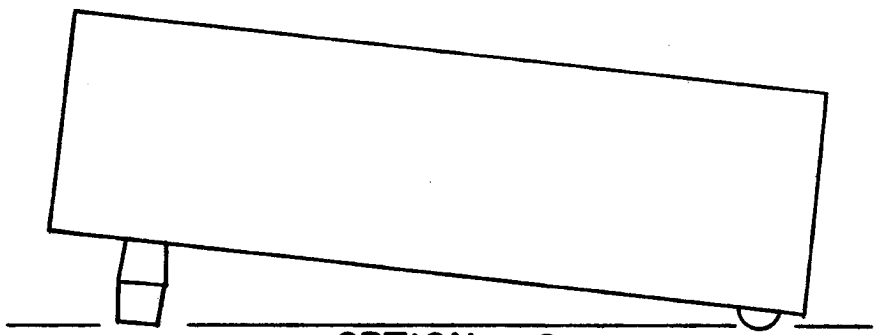

OPTION # 2

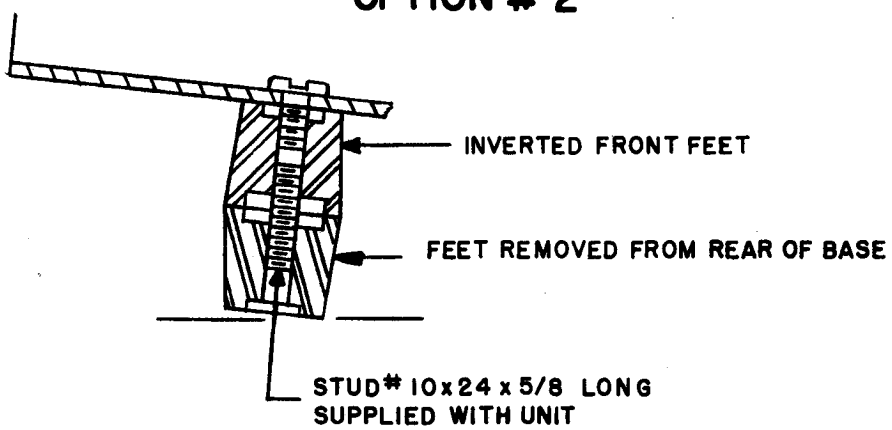

III CONTROL FUNCTIONS

A. FRONT PANEL CONTROLS:

1. MAIN TUNING - The main tuning knob of the TR-4 determines the frequency on which you transmit and receive. Each division around the calibrated skirt on this knob is equal to 1 kc and each division on the main tuning dial is equal to 10 kc. The small red knob just to the right of the dial scale is for adjusting the position of the indicator line for calibration. The knob skirt is also adjustable by pushing it in slightly and rotating it in the desired direction, while holding the main tuning knob stationary.

2. SIDEBAND - The SIDEBAND control selects either of two 2.1 kc crystal filters for transmission and reception of upper and lower sidebands. Directly above this control are two indicator lights which show the sideband in use for a particular band. You will notice that one position of this switch is marked with an "X". This position must be used when operating AM or CW or when tuning up.

3. BAND - The BAND control is a seven-position switch used to select the amateur band desired. You will notice that it has three 10 meter positions. Proceeding in a clockwise direction, the first covers 28.0 - 28.6 mc, the second 28.5 - 29.1 mc and the third covers 29.1 - 29.7 mc.

4. RCVR GAIN - The RCVR GAIN control consists of two controls with concentric shafts. The lever controls the maximum RF gain of the receiver by varying the amount of negative bias applied to the grids of the AGC controlled tubes.

   The knob adjusts the audio gain by regulating the input to the grid of the audio power amplifier tube. The transceiver power switch is operated at the extreme counter clockwise end of rotation of this knob.

5. XMTR GAIN - This control regulates the microphone gain on AM and SSB. When the unit is operated on CW, it is used to adjust the RF drive to the proper level.

   This control is connected so that it regulates the VOX sensitivity as well as the audio drive to the balanced modulator. Since all changes in level due to the type mic, how close or loud you talk, etc., effect equally the VOX and audio drive requirements, this eliminates the necessity of changing the VOX adjust control, located on the side of the TR-4 chassis, once it is set properly.

6. FUNCTION CONTROL - The FUNCTION CONTROL is a four-position switch which determines the mode of operation of the TR-4.

In the SSB position the receiver portion functions until the transmitter is energized either by talking into the microphone or pressing the push to talk switch. The transmitter then emits an upper or lower sideband signal depending on the setting of the SIDEBAND switch.

In the CAL position, the 100 kc crystal calibrator is switched on for calibration purposes. The receive and transmit functions operate the same as in the SSB position.

In the X-CW position, the receiver portion functions until a key plugged into the key jack, is closed. It then goes into the transmit mode, a CW sidetone is energized, and the carrier is shifted approximately 1 kc from the received frequency. It will remain on transmit during CW keying and will return to receive when keying is stopped briefly. Note that the SIDEBAND switch must be on the "X" position when operating X-CW or X-AM. Otherwise, no RF output will be obtained.

It should also be noted that if the relays occasionally fail to close when the function switch is placed in the X-CW position and the key, if used, is closed, the VOX GAIN control should be advanced until positive relay action is obtained.

The X-CW position is also used for tuning up the transmitter. The key jack is a closed circuit type so it is not necessary to plug in a key for tune up.

On the X-AM position, a controlled carrier screen modulator is incorporated for AM transmission, and a diode detector is incorporated for AM reception. Transmit receive switching is accomplished by VOX or PTT as on SSB.

7. RF TUNE - the RF TUNE control peaks the driver and RF amplifier grid and plate coils.

8. PLATE - The PLATE control tunes the power amplifier pi-network circuit to resonance by varying the input capacity.

9. LOAD - The LOAD control matches the impedance of the transceiver power amplifier to the impedance of the load by varying the output capacity of the pi-network circuit.

10. S-METER - The S-METER indicates relative signal strength of the received signal. It is calibrated in S-units from S-1 to S-9 and in DB over S-9. Each S-unit equals approximately 5 DB and S-9 equals about 30 microvolts. On transmit it indicates the point at which the transmitting AGC starts, to help in setting the proper level of the XMTR GAIN control.

11. PLATE AMPERES - The PLATE AMPERES meter indicates plate current in the final amplifier tubes, and relative RF output.

12. OUTPUT METER CONTROL - This control consists of a push switch and potentiometer. Pushing in converts meter from Plate Amperes to a relative output indicator and rotating varies the sensativity of this indicator.

B. SIDE CONTROLS AND JACKS (front to rear).

1. PHONES - The headphone jack automatically disconnects the speaker when headphones are plugged in. The audio output impedance at the jack is 4 ohms.

   (We recommend headphones having an impedance of approximately 500 ohms.) (A speaker may be plugged in here instead of connecting it to the power connector if desired.) A Switchcraft type 229 plug (red) is supplied with the TR-4 which can be used either here or at the KEY jack.

2. MIC - This is a .210-inch diameter phone jack of the three conductor variety to accommodate microphones with push to talk switches. It requires a Switchcraft type S-230 plug which is supplied with your TR-4.

3. VOX - The VOX control adjusts the gain of the VOX amplifier and relay release time on CW.

4. ANTI VOX - The ANTI VOX control adjusts the sensitivity of the anti vox amplifier.

5. ZERO - The S-Meter ZERO control is for adjusting the no signal reading of the S-Meter to S-1.

6. KEY - The KEY jack is of the normally closed variety. Note that plugging a key into this jack will disable the transmitter on all modes of operating and the receiver on AM unless the key is closed.

C. REAR CONTROLS & JACKS

1. LIGHTS - The LIGHTS control is a two position slide switch which is used to control the brilliance of the dial lights. The letters D and B indicate dim and bright respectively.

2. CARRIER BALANCE - The CARRIER BALANCE control is a potentiometer located on top of the chassis along the rear edge and is for balancing the balanced modulator. Note that this control has a planetary drive and requires 10 1/4 turns for complete travel.

3. SIDETONE - The SIDETONE control, located on the rear of the chassis, controls the volume of the CW sidetone with respect to the received signal. If no sidetone is desired, rotate the SIDETONE control fully counter clockwise.

4. RCVR MUTE - The RCVR MUTE jack provides a means of muting an external receiver without an external relay. It provides DC path to ground on receive and may be used with Drake 1-A, 2-A, 2-B, 2C, R-4 and R-4A receivers.

5. RCVR ANT - The RCVR ANT. jack provides a means of connecting the antenna to an external receiver without an external relay.

6. ANTENNA - An SO-239 connector connects the TR-4 to the station antenna system.

D. OTHER

1. TCVR/RCVR switch selects between normal transceive operation and reception with an external receiver. It is located on the left side of the chassis.

2. PTO indicator lamp (mounted directly above the main tuning knob) lights only while the TR-4 PTO is functioning. For example, when using on RV-4 with its function switch in "RCV" and transmitting with the TR-4, the TR-4 indicator lamp lights. When the transmission has ended, the TR-4 lamp goes out. If the RV-4 used has an indicator lamp it lights whenever the TR-4 lamp does not.

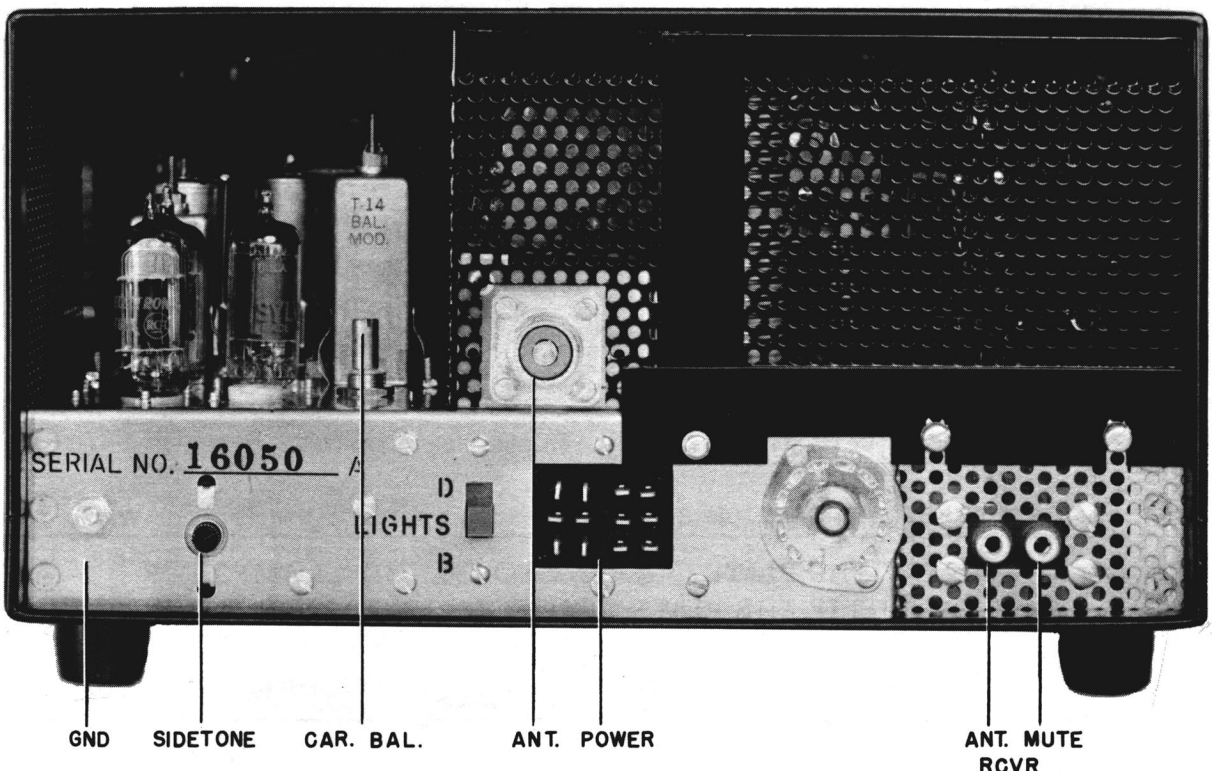

Fig. 7 REAR VIEW

IV TUNING PROCEDURE

WARNING: UNDER NO CIRCUMSTANCES SHOULD OPERATION OF THE TR-4 BE ATTEMPTED UNLESS IT IS CONNECTED TO A PROPER ANTENNA OR A DUMMY LOAD OF SUFFICIENT POWER HANDLING CAPACITY.

A. BIAS ADJUSTMENT:

Before any type of operation is attempted, it will be necessary to set the power supply bias adjustment as described here.

1. Turn on TR-4 by rotating RCVR GAIN control knob clockwise.
2. Rotate XMTR GAIN control fully counter clockwise.
3. Turn SIDEBAND switch to the counter clockwise position.
4. Turn function switch to X-CW.
5. Adjust AC-3 or DC-3 Bias adjustment for a reading of .1 on the Plate Amperes meter. This completes the adjustment.

B. ADJUSTING DIAL CALIBRATION:

The calibration of the main tuning dial on the TR-4 may vary slightly from band to band due to the tolerance limits of the various crystals. Therefore, the main tuning dial index has been made adjustable by means of the small red knob to its right. To set the calibration on a given band, proceed as follows:

1. Set XMTR GAIN fully counter clockwise.
2. Set FUNCTION switch to CAL.
3. Set BAND SWITCH to desired band.
4. Peak RF TUNE for maximum noise.
5. Zero beat the 100 kc calibrator signal nearest the desired operating frequency.
6. Slide the red knob to the right of the dial scale until the index line coincides with the 100 kc dial calibration.
7. While holding the main tuning knob, push in on its calibrated skirt and rotate it until the arrow coincides with the indicator line.

C. TUNE-UP ON THE DESIRED BAND:

WARNING: DO NOT ALLOW THE PLATE CURRENT TO EXCEED .1 AMPS FOR MORE THAN 5 OR 6 SECONDS IF THE PLATE CONTROL IS NOT TUNED FOR PLATE CURRENT DIP OR MAXIMUM R.F. OUTPUT. Failure to observe this warning will result in rapid final amplifier tube deterioration due to excessive plate dissipation.

Note: The final amplifier pi network will match a 50 ohm load with VSWR no higher than 2:1 except on 80 meters where a lower VSWR will be required. Here it may be found necessary to use an external "match box" or change the feed line by 1/8 to 1/4 wave length to get the proper match.

Preset the controls as follows:

1. BAND SWITCH to desired band.
2. FREQUENCY knob to a frequency inside of the amateur band in use.
3. XMTR GAIN fully counter clockwise.
4. LOAD fully counter clockwise.
5. SIDEBAND in the "X" position.
6. FUNCTION switch on SSB.
7. RF TUNE - Temporarily peaked on received noise.

Rotate the function switch to the X-CW position and advance the XMTR GAIN control clockwise until the Plate Amperes meter moves up scale slightly from idling current. (If plate current is high even with XMTR GAIN fully counter clockwise, reduce it to idling by adjusting CARRIER BALANCE control, see next section, D.) Peak the RF TUNE control for maximum plate current and quickly tune the PLATE control for a dip in plate current. When the dip is found, rotate the XMTR GAIN clockwise until the plate current no longer increases.

Depress the OUTPUT METER CONTROL and rotate it for a significant indication on the Plate Amperes meter (This control converts the Plate Amperes meter to a relative output indicator and varies its sensitivity.)

Alternately adjust LOAD and PLATE controls in small increments for maximum R.F. output. If meter goes off scale during this process, simply reduce the sensitivity by turning the Output Meter Control counter clockwise.

Now release the OUTPUT METER CONTROL and adjust PLATE control slightly for plate current dip. At this point, the plate current should read between .380 and .500 amps depending upon line voltage, antenna match, drive, tube condition, etc. Do not attempt to increase the LOAD control beyond the point at which maximum R.F. output occurs. This will result in excessive plate dissipation.

It should not be necessary to advance the LOAD control beyond 4 1/2 to obtain maximum R.F. output. Further advancement indicates that the SWR of the antenna system is too high and leaving the control set beyond this point is likely to result in excessive harmonic radiation.

The above procedure should be completed as quickly as possible and the function switch should be returned to the SSB position.

Notice that when the function switch is in the X-CW position, the screen voltage on the final amplifier tubes is reduced to prevent overheating. When the switch is on SSB, this voltage is increased so that a peak power input of 300 watts can be obtained.

D. ADJUSTMENT OF CARRIER BALANCE CONTROL:

The CARRIER BALANCE control is factory adjusted and should require a minimum of resetting under most conditions. However, it should be checked before the TR-4 is operated on SSB.

After tuning up the TR-4 as described above, set the SIDEBAND switch to "X", the XMTR GAIN fully counter clockwise, and the FUNCTION switch to X-CW. Now depress OUTPUT METER CONTROL and adjust the CARRIER BALANCE control (located on top of the chassis near the rear edge), for zero R.F. output. (If output cannot be reduced to zero, adjustment of the carrier balance capacitor may be necessary. (See section VIII). Return the FUNCTION switch to SSB. This completes the adjustment.

The carrier suppression provided by the crystal filters on SSB is sufficiently great that it will be impossible to adjust the balanced modulator for optimum attenuation in this mode unless a sensitive RF detector (receiver) is used in close proximity to the transceiver. We therefore recommend that balanced modulator adjustment be performed in the CW mode since the filters are not effective here. The balanced modulator should be adjusted after the unit has warmed up about 1/2 hour in order to maintain optimum balance over a prolonged period of time.

Some residual signal will occasionally be observed on the CW mode when the XMTR GAIN control is set at minimum. This is of no consequence since the additional attenuation provided on SSB will provide the desired carrier suppression.

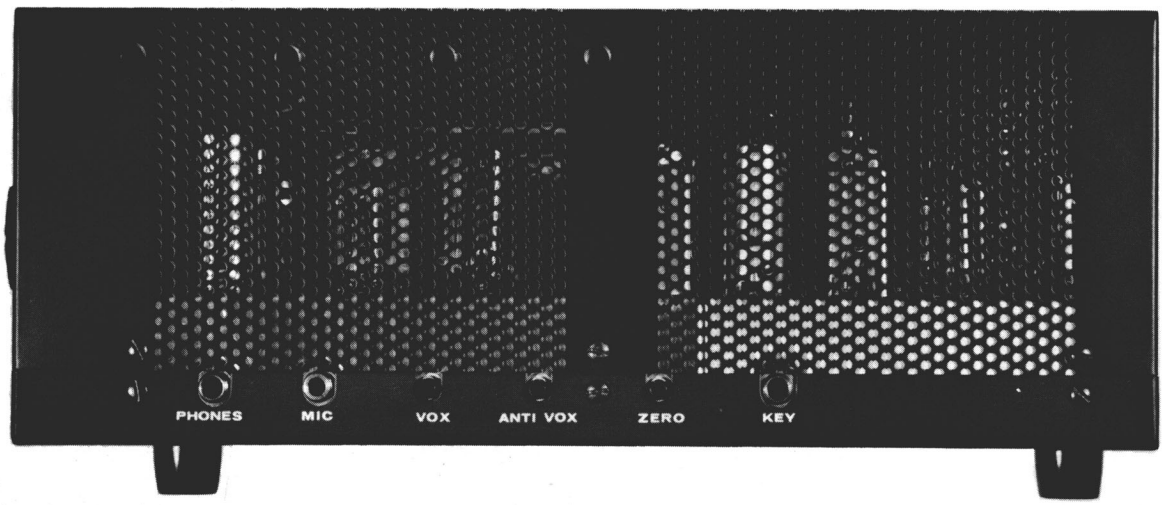

Fig. 8 SIDE VIEW

V OPERATION

In the following discussion, it is assumed that the TR-4 has already been tuned up on the desired band as described under tuning procedures.

A. VOICE CONTROLLED OPERATION ON SSB:

Preset the controls as follows:

SIDEBAND	- - On desired sideband as shown by indicator lights.
FUNCTION SWITCH	- - On SSB.
XMTR GAIN	- - Fully counter clockwise.
RF GAIN	- - Fully clockwise.
AF GAIN	- - Fully counter clockwise (do not turn off power).
VOX GAIN	- - Fully clockwise.
ANTI VOX	- - Fully counter clockwise.

While talking into the microphone in a normal voice, increase the XMTR GAIN control until the S-meter starts kicking up scale about 2 or 3 S-units above its resting value. (With no modulation, the S-meter will rest from about S-3 to S-8 on transmit.) This indicates that the transmitting AGC is starting to work and the transmitter is peaking at maximum output. Continue talking and reduce the VOX GAIN until a point is reached where further reduction results in too frequent relay drop out.

Now increase the AF GAIN until received signals are of the desired volume. This may cause the transceiver to cycle back and forth between transmit and receive. Adjust the ANTI VOX control until this cycling stops. You are now ready to operate.

B. PUSH TO TALK OPERATION ON SSB.

If the push to talk switch on your microphone is properly connected as described under installation instructions, it may be depressed at any time, thus over-riding the VOX system.

If you do not desire the VOX to function at all, turn the VOX adjust control fully counter clockwise.

REMEMBER: On SSB the TR-4 transmits on exactly the same frequency on which it receives. Therefore, be sure that before you answer another station's CQ, or break another QSO, you have the signals tuned in so that the voices sound normal. Otherwise, you will not be transmitting exactly on frequency.

NOTE: If a key is used, it must either be closed or unplugged from the key jack for SSB and AM operation.

C. CW OPERATION:

To work CW, plug your key into the KEY jack. If an electronic keyer is used, connect it for grid block keying. Leave the key in the open condition.

Note that the TR-4 uses shifted carrier CW. With this system, it is possible to transmit approximately on the received station's frequency without being zero beat while receiving. The receiver BFO is shifted from the transmitted signal frequency about 1 KC.

To receive CW signals, place the function switch on the X-CW position and the SIDEBAND switch in the "X" position. Tune in a CW signal for an audio pitch of about 1 kc and adjust the audio gain control for pleasing volume.

To transmit, depress the key, and rotate the XMTR GAIN control clockwise just below the point at which plate current no longer increases. DO NOT ADVANCE IT BEYOND THIS POINT.

Advance the SIDETONE control on the rear of the chassis until the sidetone reaches the desired volume. (adjusting the RCVR GAIN knob will regulate both the received signal and sidetone volume.)

The TR-4 uses automatic transmit receive switching. This means that it will automatically transmit when the key is depressed and will remain in the transmit condition through keying. It will return to the receive condition when the key is released for a brief period. If this period is too long, decrease the VOX control setting to minimum.

Manual transmit receive switching can be accomplished by connecting an external switch (i.e. foot switch) to the push to talk circuit of the MIC jack.

D. AM OPERATION:

For AM operation, the FUNCTION switch should be in the X-AM position and the SIDEBAND switch should be in the X position. If a key is used, it should be left closed or unplugged.

Tune in AM signals for most pleasing audio. This will not necessarily coincide with maximum S-meter reading.

The same procedure should be followed in setting the various gain controls for VOX operation on AM as for SSB, except that the XMTR GAIN should be adjusted for plate current peaks of from .2 to .25 amps when talking into the microphone in a normal voice. Care should be taken to stay within these limits since the transmitting AGC does not work on AM.

The TR-4 uses a controlled carrier screen modulator which holds the unmodulated carrier input power to a few watts but allows 260 watts P.E.P. input on voice peaks. This system is compatible with SSB linear amplifiers. Due to the low duty cycle of this type of AM, a linear can be run with the same P.E.P. input as it can on SSB.

If AM reception using product detection is desired, it will be necessary to switch the function switch to the SSB position for receiving and back to X-AM for transmitting.

E. GENERAL PRECAUTIONS FOR OPERATIONS NEAR BAND EDGE:

If you intend to operate near the edge of the band, be sure that you check the dial calibration as described under tuning procedure. When working SSB be sure you are using the sideband that will be inside the band i.e. lower on the high edge or upper on the low edge. On AM or CW, the transmitted carrier will be 1 KC higher or lower than the indicated dial frequency depending upon whether the upper or lower sideband indicator light is lit.

F. OPERATION WITH LINEAR AMPLIFIERS:

The TR-4 transceiver is conservatively rated at 300 watts P.E.P. input. It is doubtful if it would be worthwhile to use a linear with a power rating of less than 1000 to 2000 watts P.E.P. input. A triode type grounded grid linear of 1000 to 2000 watt P.E.P. rating will present a satisfactory load for the TR-4.

If your particular linear is of the grounded cathode type with high impedance input, it will be necessary to install a resistive pad between the TR-4 and the linear that will present the proper impedance to the TR-4. Such a pad must be made of non-inductive resistors and must have adequate power handling capacity to prevent it from being destroyed when the TR-4 is turned on. Antenna switching should be accomplished as shown in Figure 2. Many linears have these relays built in.

In order to properly operate the TR-4 with a linear, proceed as follows:

1. With the TR-4 connected to the linear, tune the RF TUNE control as described under "TUNING PROCEDURE".
2. Set the LOAD control to the setting indicated on the chart below for the band desired.
3. Tune the PLATE control for minimum plate current.
4. Switch the FUNCTION switch to the desired mode of operation.
5. Advance the XMTR GAIN control until the desired amount of input to the linear amplifier is obtained.

Note that when the TR-4 is loaded much below maximum RF output the ALC does not function properly and flat topping in the TR-4 may result. Care should be taken to keep the XMTR GAIN below the point where this occurs. This can be accomplished by making sure that the average peak plate current does not exceed one half of the plate current obtained on tune up (step 3).

If your linear amplifier has ALC output, connect it to the TR-4 as shown in figure 2. If the TR-4 is properly tuned, this should prevent flat topping on SSB regardless of the XMTR GAIN control setting. However, it will not prevent overdrive on AM since the ALC does not function in this mode.

BAND	52 ohm LOAD SETTING
80	2
40	3
20	2
15	3
10	2

NOTE:
If RTTY operation is contemplated, write for special instructions.

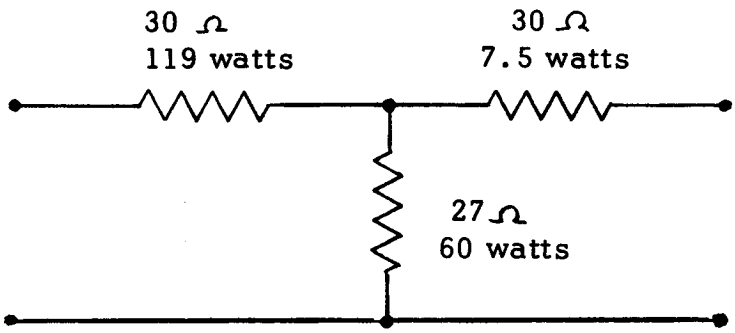

NOTE:
Input and output impedances are 50 ohms.

For Linears Requiring 12 Watts Drive

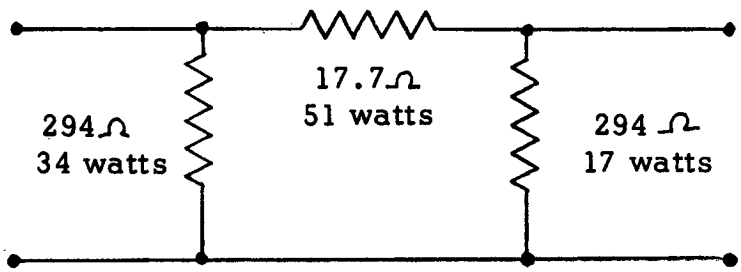

IMPORTANT:
All resistances must be noninductive. Series parallel combinations of 2 watt carbon resistors could be used.

For Linears Requiring 100 Watts Drive

Fig.9 ATTENUATORS FOR USING TR-4 WITH LINEAR AMPLIFIERS

VI THEORY OF OPERATION

A. RECEIVER CIRCUITRY:

A signal entering the antenna terminal passes through the antenna switching contacts of the relay and is applied to the grid of the RF amplifier V-7 through the selectivity of the L/C network formed by T-9, T-10, and a section of the RF TUNE capacitor C-37.

After being amplified, it is passed through an additional L/C network consisting of T-7, T-8, and the remaining section of C-37, to the grid of the mixer (V-3b).

Here it is combined with a signal from the premixer system of the required frequency to give 9.0 mc output.

The premixer system consists of a 4.9 - 5.5 mc solid state permeability tuned VFO T-5, a buffer (Q-2), a switchable overtone crystal oscillator (V-1a), the premixer pentode (V-1b), and a cathode follower (V-3a).

The VFO signal output is applied to the grid of the premixer pentode through the buffer (Q-2) and its associate circuitry. For 80 and 20 meter operation, it is fed around the premixer and through the cathode follower to the mixer.

On 40, 15, and 10 meters a signal from the crystal oscillator beats with the VFO in premixer (V-1b), to produce the desired injection frequency.

On 40 meters for example, a 21.5 mc overtone crystal and the appropriate coil (L-1) are switched into the crystal oscillator circuit. The output from the oscillator is fed into the premixer pentode where it beats with the 4.9 - 5.5 mc VFO to produce an output frequency of 16.0 - 16.6 mc. This output is fed through the 16.0 - 16.6 mc bandpass coupler T-3, and through the cathode follower (V-3a).

On 15 meters a 35.5 mc crystal is used with a 30.0 - 30.6 mc coupler (T-2) and on the three 10 meter ranges, 42.5, 43.0, and 43.6 mc crystals are used with a 37.0 - 38.7 mc coupler (T-1).

The 9.0 mc output of the mixer (V-3b) passes through the impedance matching transformer T-6 into the upper or lower sideband crystal filter. The setting of the SIDEBAND knob determines which crystal filter will be used.

From here the signal passes through the impedance matching transformer T-13 and is amplified by the 9 mc receiving I.F. amplifier system composed of tubes V-11 and V-12 and the I.F. transformers T-11 and T-12. The output of T-12 is applied to the AGC amplifier (V-13a), to the product detector (V-16), and to the diode detector (V-2).

The AGC amplifier (V-13a) is biased past cut off to provide AGC delay. When sufficient R.F. voltage from T-12 is applied to its grid, plate current flows during part of the cycle. This causes amplified negative voltage to appear across its plate load resistor (R-63), thus charging C-115. This negative control voltage is applied to the grids of V-7, V-11, and V-12. C-115 discharges through R-63 with a time constant of approximately one second. Rotating the RF gain control counter clockwise applies increasingly more negative bias to the AGC controlled grids, thus limiting their maximum gain when AGC voltage diminishes.

The product detector tube V-16 consists of a 9 mc crystal oscillator formed by the cathode, grid 1, and grid 2 as an anode, and a product detector formed by the cathode, grid 3, and the plate. The I.F. signal is applied to grid 3 where it beats against the BFO voltage in the tube. The resulting audio signal is of sufficient amplitude to drive the audio output tube V-17 with no additional amplification. The output of V-16 is applied to the function switch and is fed to V-17 through the audio gain control on CW and SSB.

The I.F. Signal from T-12 is also applied to V-2 which functions as a diode detector and audio amplifier in the AM receive mode. The output of this stage is also fed to the function switch and is directed to V-17 through the audio gain control when the switch is in the X-AM position.

The output of V-17 is applied through the audio output transformer and through the phone jack (J-5) to pin 12 of the power connector. Also, output from the plate of V-17 is applied to the anti vox rectifier D-6 through the ANTI VOX control.

A 100 kc crystal calibrator (V-5) is switched on when the function switch is on the CAL position. Its output is coupled to the grid of the RF amplifier (V-7).

The S-Meter in the TR-4 operates in a bridge circuit with the plates of a receiver I.F. amplifier (V-11), and the transmitting I.F. amplifier V-15 on one leg of the bridge and plate of the audio output tube V-17 on the other leg. Receiving AGC voltage applied to V-11 on receive and transmitting AGC voltage applied to V-15 on transmit cause these tubes to draw less current, thus unbalancing the bridge, and causing the S-meter to read up scale. The bridge is balanced on receive by the ZERO control. On transmit the meter may rest slightly up scale.

B. <u>TRANSMITTER CIRCUITRY:</u>

Audio input from the microphone is applied to one section of the microphone amplifier V-18 where it is amplified and applied to the remaining section of this tube through one gang of the XMTR GAIN control.

Low impedance output from the cathode of the second triode of V-18 is applied to the balanced modulator through the function switch for SSB operation. High impedance output from the plate is applied to the grid (pin 7) of the AM screen modulator V-14, and to the grid of the first VOX amplifier triode (V-19a) through the VOX ADJ.

control. The output from V-19a is rectified by the VOX rectifier D-5 and the resulting positive DC voltage is applied to the grid of the relay control triode V-19b causing it to conduct and close the transmit/receive relay.

Audio voltage from V-17 is receified by the ANTI VOX rectifier D-6 thus supplying negative voltage peaks to the grids of V-19b, preventing it from conducting and closing the relay when the microphone picks up audio from the speaker.

Cut off bias for the relay tube is obtained from voltage dividers formed by R-104, R-124, R-125, and R-126. When the microphone's push to talk switch is pressed, the grid of V-19b is grounded, thus removing the negative bias, causing it to conduct and close the relay.

R.F. from the 9.0 mc crystal oscillator portion of the product detector tube V-16 is applied to the balanced diode modulator T-14 through the CARRIER BALANCE control. On SSB the audio from V-18 is also applied to the balanced modulator and the result is a double sideband suppressed carrier signal which is applied to the transmitter I.F. amplifier.

The amplified output is fed through T-13 to the upper or lower crystal filter where the undesired sideband is filtered out.

The resulting SSB signal is fed through T-6 to the transmitting mixer V-4 where it is combined with a premixer signal of the proper frequency to give output on the desired amateur band.

Output from V-4 passes through the L/C circuit composed of T-7, T-8, and one half of C-37 to the grid of the driver tube V-6. Here it is amplified and applied to the grids of V-8, V-9, and V-10 through the L/C network composed of T-9, T-10, and the other half of C-37.

The three parallel power amplifier tubes boost the signal to a power level suitable for transmission. The output impedance of the power amplifier tubes is matched to a 52 ohm load by means of the pi network circuit composed of L-8, L-9, C-94, and C-95.

At the first trace of flat topping in the final amplifier tubes, a small amount of grid current will be drawn which produces a voltage drop across R-47. The small negative going voltage thus obtained is applied through R-46 to the cathode of V-13b where it is amplified.

The amplified negative voltage is applied to the grid of V-15, thus reducing the level of the driving signal.

When the function switch is placed in the X-CW position, V-2 becomes an audio phase shift oscillator which is grid block keyed along with the transmitting mixer V-4 and the driver V-6. The audio output of this tube is applied to the grid of the

product detector tube V-16, through the SIDETONE control, to provide audio output from the speaker for CW monitoring, and to the grid of the VOX amplifier tubes V-19a thus causing relays K-1 and K-2 to close.

The relays turn on the transmitter, cause the 9.0 mc oscillator to be shifted to 9.001 mc and apply a variable source of DC, regulated by half of the XMTR GAIN control to the balanced modulator thus unbalancing it.

This causes a 9.001 mc signal to be fed out of the balanced modulator, through V-15 and into the crystal filter. The SIDEBAND control must be in the "X" position in order to allow the signal to pass.

A screen resistor is switched into the final amplifier screen circuit to prevent excessive screen current during tune up and key down.

If the function switch is placed on X-AM, the AM screen modulator V-14 is inserted in series with the final amplifier screen and a fixed rather than a variable source of voltage is applied to the balanced modulator thus unbalancing it. Relay K-2 shifts the 9 mc oscillator to 9.001 on transmit just as it does on X-CW. VOX and PTT functions are exactly the same on AM as on SSB.

When relay K-1 is closed, either through VOX or PTT excitation, the cathode of V-3b, V-7, V-11, and V-12 are isolated from ground disabling the receiver and the cathodes of V-4, V-6, V-8, V-9, V-10, and V-15 are connected to ground to actuate the transmitter. Also the antenna connector is switched from the receiver input to the final amplifier tank circuit. If the TCVR/RCVR switch is in the RCVR position, the RCVR MUTE jack is grounded through RFC11 and RFC7 and the antenna is connected to the RCVR ANT jack instead of T9 on the receive condition of the relays.

Depressing the Output Meter Control disconnects the Plate Amperes Meter from the final amplifier cathode circuit and connects it to the diode (D-9) and its associated circuitry. This network samples the R.F. output voltage at the antenna connection, rectifies it, and applies it across the meter through R-149. Rotating the Output Meter Control changes the resistance of R-149 thus changing the sensativity of the indicator.

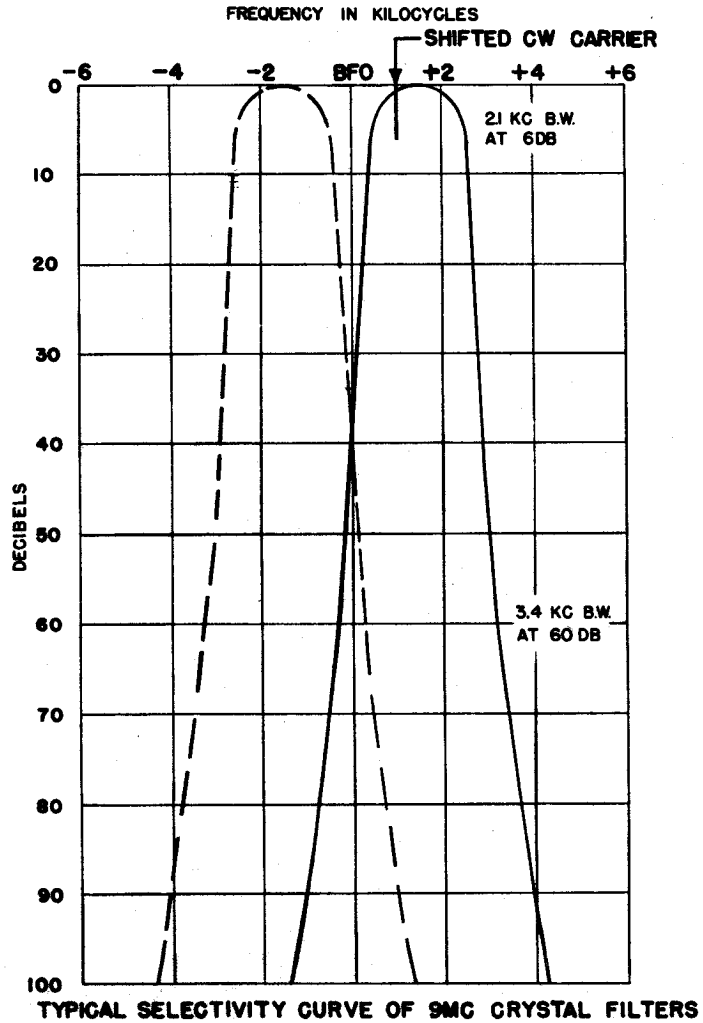

TYPICAL SELECTIVITY CURVE OF 9MC CRYSTAL FILTERS

FIG. 10A

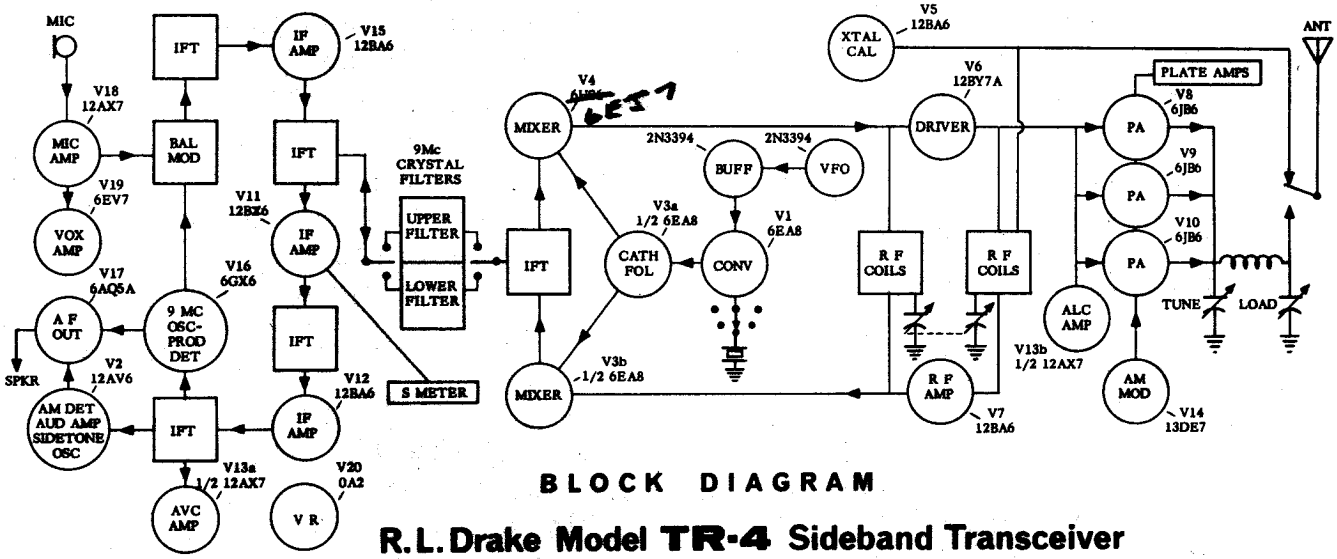

BLOCK DIAGRAM

R.L. Drake Model TR-4 Sideband Transceiver

FIGURE 10B

VII SERVICE DATA

We will check and factory align your TR-4 for a nominal fee of $10.00 plus transportation charges if the set has not been tampered with. If repairs are necessary, an additional charge will be made. Units that have been tampered with or misaligned will be repaired on a time and material basis only.

A. REMOVING TOP COVER:

WARNING: Extreme caution should be taken when the top and bottom covers of the TR-4 are removed. High voltage is present at several points which could cause a lethal electrical shock!!

1. Remove the three top screws on each side of the TR-4.
2. Remove cover by first pulling up on the rear and then on the front of the cabinet.

B. REMOVING BOTTOM COVER:

1. Remove the six bottom screws from the sides of the TR-4.
2. Lift TR-4 chassis out of bottom cover.

C. TUBE REPLACEMENT:

In general, most trouble in radio equipment of good design is due to tube failure. The best method of finding defective tubes is by direct substitution. It is best not to rely too heavily on tube checkers.

The TR-4 has been designed so that, with the exception of V-8, V-9 and V-10, tubes can be replaced without need for realignment. These tubes are to be replaced with a matched set of the same brand as originally supplied. If a different brand is used, alignment of T-7, T-8, T-9 and final amplifier neutralization is recommended. Matched sets of R.C.A. or Sylvania 6JB6's are available directly from us.

To replace your 6JB6 tubes it is necessary to remove only the top of the final amplifier cage. To do this, remove the sheet metal screws holding the PA cover to the cage. A disc-handle is provided on the cover to facilitate removal. To replace the PA cover, simply reverse the process. Be sure the parasitic suppressors do not short to the cage.

D. TROUBLESHOOTING:

Careful consideration has been given in the design of the TR-4 to keep maintenance problems to a minimum. However, it is quite possible that some problem will arise which cannot be cured by tube substitution. If this occurs, we suggest that you either return your unit to your dealer, or write direct to our service department describing your problem in detail. Include full information concerning external connections, control settings, tubes substituted, etc. Do not return equipment to the factory without prior authorization.

In case of malfunction, first check power supply fuse, filament fuse in TR-4, and #12 fuse lamp on relay assembly for continuity. The voltage and resistance charts which follow should be valuable in isolating minor problems. However, no attempt should be made to service the TR-4 unless you are thoroughly familiar with electronic circuitry and servicing technique. CARE SHOULD BE TAKEN NOT TO DISTURB THE LEAD DRESS IN THE TR-4 SINCE SEVERAL CIRCUITS ARE QUITE CRITICAL IN THIS REGARD.

Figure 11 RESISTANCE CHART

PIN	TYPE	1	2	3	4	5	6	7	8	9
V1	6EA8	15K	2.5 Meg	26K	0	Fil	14K	220	220	150K
V2	12AV6	3.3Meg	Inf.	Fil	0	150K	150K	246K		
V3	6EA8	11.5K	150K	230K	Fil	0	16K	2.2K	1K	34K
V4	6EJ7	29K	380K	29K	0	Fil	0	16.5K	13.5K	0
V5	12BA6	1Meg	1K	Fil	0	350K	125K	1K		
V6	12BY7A	27K	70K	0	0	0	Fil	13K	30K	0
V7	12BA6	2.5Meg	0	Fil	0	16K	12K	100		
V8	6JB6	13K	30K	28K	Fil	Fil	30K	13K	0	28K
V9	6JB6	13K	30K	28K	Fil	Fil	30K	13K	0	28K
V10	6JB6	13K	30K	28K	Fil	Fil	30K	13K	0	28K
V11	12BZ6	2.6Meg	170	0	Fil	14.5K	16K	0		
V12	12BA6	2.4Meg	0	Fil	0	14.5K	16K	68		
V13	12AX7	1Meg	25K	45K	0	0	2.2Meg	55K	50K	Fil
V14	13DE7	13K	2.2Meg	2.2Meg	Fil	0	2.2Meg	22Meg	0	Inf.
V15	12BA6	2Meg	0	0	Fil	14.5K	18K	40K		
V16	6GX6	2.2Meg	1K	0	Fil	235K	15K	22K		
V17	6AQ5	500K	270	0	Fil	13K	10K	500K		
V18	12AX7	350K	6.8Meg	0	0	Fil	350K	500K	3.3K	N.C.
V19	6EV7	18K	4.2Meg	0	Fil	0	113K	500K	820	1.5Meg
V20	OA2	14K	0	Inf.	0	14K	Inf.	0		

Figure 12 VOLTAGE CHART

PIN	TYPE	1	2	3	4	5	6	7	8	9
V1	6EA8	123	-2.2	127	0	6.3*	250 245	2.8	2.8	-2.5
V2	12AV6	0 -1.7	14.5 0	12.6*	0	0 -.8	0 -.8	255 130		
V3	6EA8	155 150	0	90 150	6.3*	0	255 245	2.8 149	18 16.5	18 16
V4	6EJ7	158 2.4	0	N.C.	0	6.3*	0	230 225	158 145	0
V5	12BA6	-59 0	1.1 49.5	12.6*	0	66 150	69 150	1.1 49.5		
V6	12BY7A	155 2.7	0	N.C.	0	0	6.3*	260 230	260 165	0
V7	12BA6	-.1	0	12.6*	0	230 225	90 100	1.16 146		
V8	6JB6	265 225	-62	155 3.5	6.3*	12.6*	-62	265 225	0	155 1.4
V9	6JB6	265 225	-62	155 3.5	6.3*	12.6*	-62	265 225	0	155 1.4
V10	6JB6	265 225	-62	155 3.5	6.3*	12.6*	-62	265 225	0	155 1.4
V11	12BZ6	-.1	1.5 145	0	12.6*	238	100 150	0		
V12	12BA6	-.1	0	12.6*	0	240	100 150	1.2 150		
V13	12AX7	-.16 0	-64 -62	-62 -61	0	0	-.06	-64 -62	-61 -59	6.3*
V14	13DE7	265 255	12	12	12.6*	0	12	-.94	0	61 56
V15	12BA6	0	0	0	12.6*	255 235	160 80	160 1.3		
V16	6GX6	-3.8 -3.4	3.6	0	6.3*	130 120	150	0		
V17	6AQ5	N.C.	7.5 7	0	6.3*	255 235	155 150	0		
V18	12AX7	76 74	-.5	0	0	12.6*	127 117	0	1.3 1.2	N.C.
V19	6EV7	265 185	-4 -1	0	6.3*	0	110 105	0	1.36 1.26	T.P.
V20	OA2	150	N.C.	N.C.	N.C.	N.C.	N.C.	0		

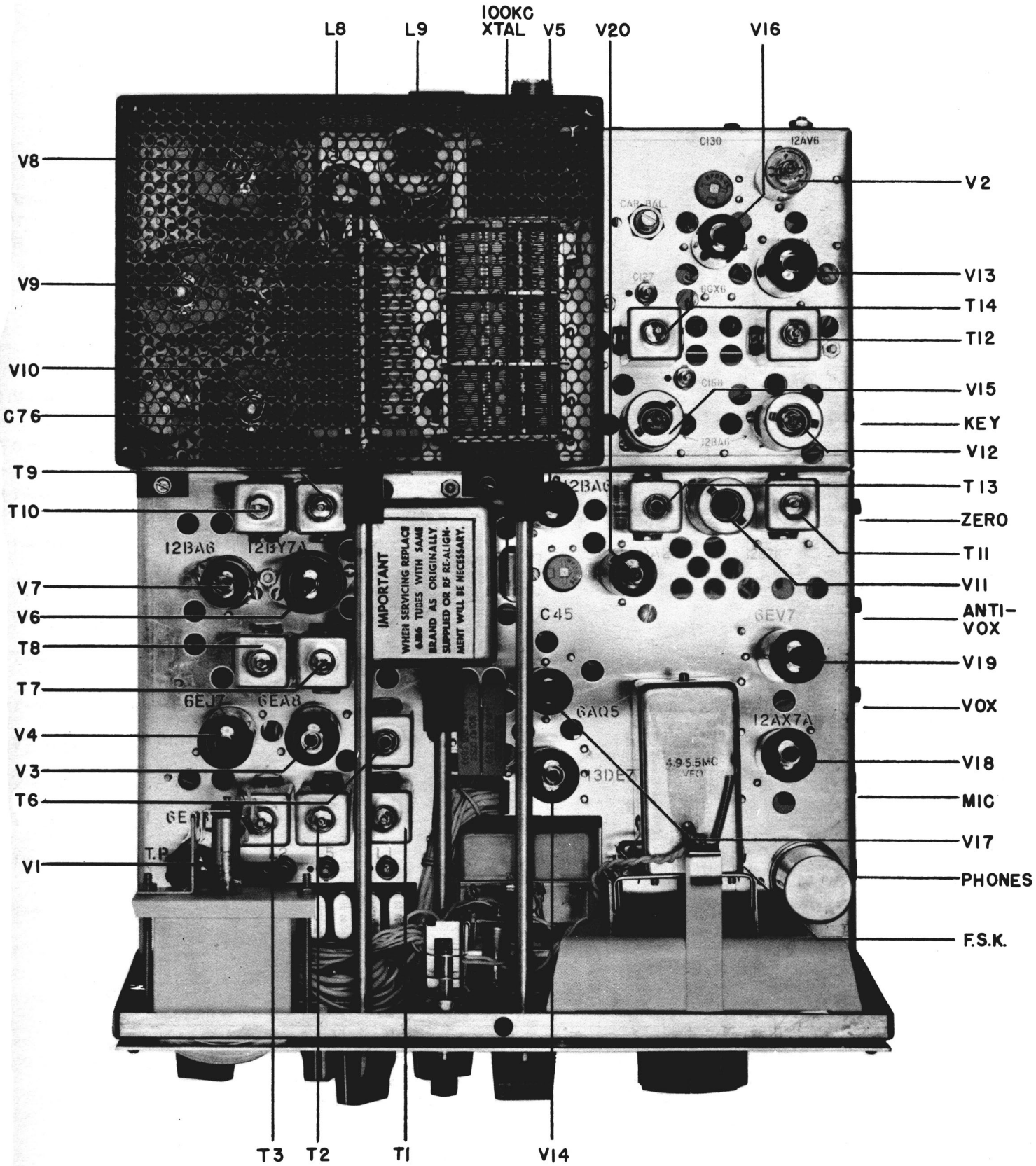

Fig. 13 TOP VIEW

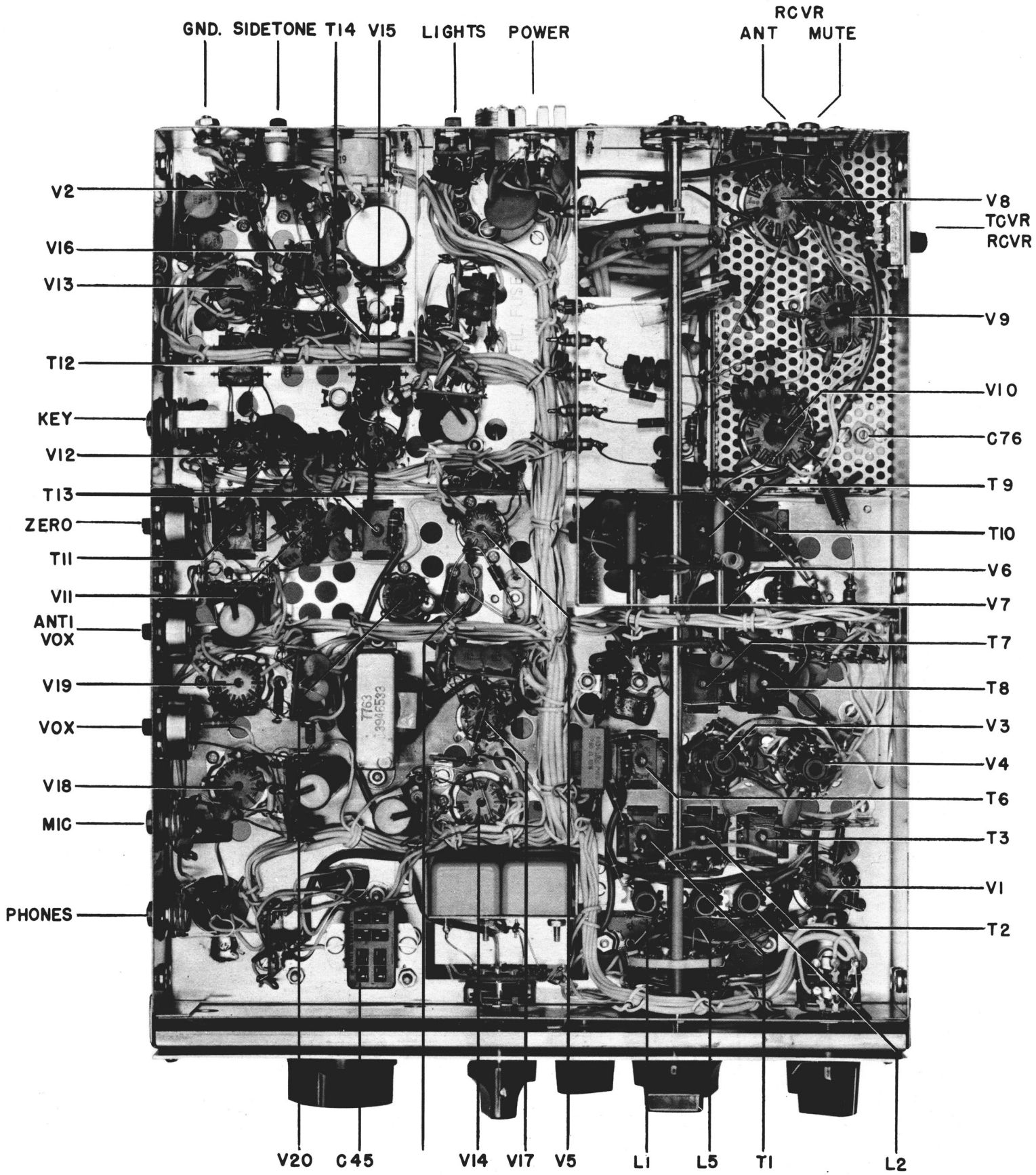

Fig. 14 BOTTOM VIEW

VIII ALIGNMENT INSTRUCTIONS

Alignment of the TR-4 will require the following equipment:

1. A general coverage receiver capable of receiving WWV.
2. An 11 megohm VTVM.
3. An alignment load consisting of a 1000 ohm non inductive resistor (1/2 watt will do), in series with a .005 uuf disk ceramic capacitor. Small alligator clips connected to each end of this arrangement would be a great help.
4. A 52 ohm dummy load of sufficient power handling capacity. (Heathkit Cantenna).

Before alignment is attempted, the plate and screen power leads of the final amplifier tubes should be disconnected where they pass through the partition under the chassis.

BE SURE POWER IS DISCONNECTED BEFORE THIS IS ATTEMPTED, OR SERIOUS ELECTRICAL SHOCK WILL RESULT.

A. CRYSTAL CALIBRATOR ALIGNMENT:

1. Connect power, turn on transceiver and let warm up 30 minutes.
2. Preset the XMTR GAIN control fully counter clockwise.
3. Set function switch to CAL.
4. Tune in WWV on the general coverage receiver with the BFO off.
5. Connect a wire from the receiver antenna terminal to V5 of the TR-4. Wrap the wire around the tube a turn or two.
6. Adjust C-45, located on top of the TR-4 chassis, until the calibrator signal is zero beat with the unmodulated WWV carrier.

B. ADJUSTMENT OF 9.0 MC OSCILLATOR:

1. Make sure that the TR-4 has had a chance to warm up for 30 minutes.
2. Set the FUNCTION switch in the SSB position.
3. Turn up the audio gain control until noise is easily audible in the speaker.
4. While switching the SIDEBAND knob back and forth, adjust C-130, located on top of the chassis near the rear edge, until the pitch of the noise is the same on both positions.

C. CRYSTAL OSCILLATOR ALIGNMENT:

1. Set the VTVM to its lowest DC negative volt scale and set pointer to about center scale with VTVM zero adjust control.
2. Connect the common lead of the VTVM to the TR-4 chassis and the DC lead to test point at V-1.
3. Set band switch to 40 meters and adjust L-1 for maximum negative DC voltage.

4. Switch to 15 meters and adjust L-5 for maximum as in step 3.
5. Switch to 10_3 (fully clockwise) and adjust L-2 for maximum as in 3 and 4.
6. The 10_1 and 10_2 bands should read about the same negative voltage as 10_3.

D. VFO ADJUSTMENT:

The permeability tuned VFO was carefully adjusted at the factory and should require no further alignment. If it does not appear to track from one end of its range to the other, it should be returned to our plant for realignment. Maximum calibration error is 1KC when calibrated to the nearest 100 KC point.

If you notice the same error from one end of the band to the other, and you cannot correct it with the movable dial index, the main dial may be slipped on its shaft enough to bring the corrector back into range.

E. ADJUSTMENT OF INJECTION COUPLERS:

1. Tune in crystal calibrator signal at 7.3 mc (BAND switch on 40 meters).
2. Place alignment load from pin 6 of V-1b to ground and adjust T-3 top for maximum S-meter reading.
3. Move load to pin 9 of V-3a and adjust T-3 bottom for maximum.
4. Move BAND switch to 15 meters and repeat the procedure for T-2.
5. Move BAND switch to the center 10 meter band and repeat the above procedure for T-1. Note: On T-1, adjust the bottom slug when the load is on pin 6 of V-1b and the top slug when the load is on pin 9 of V-3a.

F. RECEIVING I.F. ALIGNMENT:

1. Peak R.F. TUNE control on noise at 3.8 mc.
2. Adjust T-11 top and bottom and T-12 top and bottom for maximum noise from speaker.

G. ADJUSTMENT OF BAL. MODULATOR:

1. Disconnect power and reconnect the screen and plate supply leads to the final amplifier tube.
2. Reconnect power.
3. Connect dummy load to antenna jack (J-4).

NO ATTEMPT SHOULD BE MADE TO OPERATE THE TR-4 ON TRANSMIT UNLESS IT IS CONNECTED TO AN ADEQUATE LOAD. TO DO SO COULD RESULT IN SERIOUS DAMAGE.

4. Short the push to talk terminal of the MIC jack to ground to actuate the transmitter.
5. With the XMTR GAIN control fully counter clockwise and with the function switch on SSB, adjust the CARRIER BALANCE control to one end of its rotation. Prevent plate current from rising above .15 amps by detuning the R.F. TUNE control.

6. Adjust T-14 for peak plate current, being careful not to exceed the .15 amp limit.
7. Readjust CARRIER BALANCE control for minimum plate current.
8. Remove short from push to talk terminal.

H. FILTER MATCHING TRANSFORMERS:

1. Tune in crystal calibrator signal at 4.0 mc and adjust main tuning so that changing the SIDEBAND switch from the upper to the lower sideband makes no difference in the S-meter reading.
2. Turn R.F. tune control counter clockwise until S-meter reads no higher than S-3.
3. Once again adjust main tuning until switching SIDEBAND knob between the X and non X position makes no difference.
4. With the SIDEBAND switch in its counter clockwise position, adjust T-6 and T-13 for maximum S-meter reading.
5. Repeat steps 2 thru 4 again for best results.
6. Center 9.0 mc oscillator as described in paragraph B.

I. CARRIER BALANCE ADJUSTMENTS:

1. Turn the XMTR GAIN control fully counter clockwise, set the SIDEBAND switch on "X", and turn the FUNCTION switch to X-CW.
2. Adjust the CARRIER BALANCE control for minimum plate current and R.F. output.
3. Now adjust the slug tuned capacitor (C-127) for further null.
4. Alternately adjust these two controls until no further null can be obtained.
5. Return the FUNCTION switch to the SSB position.
6. An external receiver tuned to the transmitter frequency will enable a deeper null to be obtained due to its additional sensitivity.

J. ADJUSTMENT OF MIXER AND RF COILS:

1. Place BAND switch on 80 meters.
2. Set RF tune control to 5.
3. Set FUNCTION switch to CAL and tune in the calibrator signal at 3.8 mc.
4. Adjust T-7 and T-9 bottom for maximum S-meter reading.
5. Set BAND switch to 40 and RF TUNE to 7.
6. Tune in a calibrator signal at 7.3 mc and adjust T-8 and T-10 top for maximum S-meter reading.
7. Set BAND switch to 20 and RF TUNE to 5.
8. Tune in CAL signal at 14.2 mc and peak T-7 and T-9 top for maximum S-meter reading.
9. Set BAND switch to the center 10 meter band and the RF tune control to 5.
10. Set the SIDEBAND switch to X and FUNCTION switch to X-CW (Tuning at 28.8 mc).

11. Slowly rotate the XMTR GAIN from its counter clockwise position until a definite increase in plate current is obtained.
12. Adjust T-8 and T-10 bottom for a peak in plate current, being careful not to allow the plate current to rise above .15 amps for more than a few seconds at a time.
13. Return FUNCTION switch to SSB.

K. FINAL AMPLIFIER NEUTRALIZING:

1. Attach an RF output indicator between the TR-4 and the dummy load. If a Heath Cantenna is used, a VTVM can be attached to it for RF output indication. If no external output indicator is available, the TR-4's own RF output indicator can be used. However, this is considerably more inconvenient for this purpose.
2. Load the TR-4 on 10 meters following "Tune up procedure"
3. While tuning the PLATE control back and forth through resonance, adjust C-76, using an insulated screwdriver, until the plate current dip and maximum RF output occur simultaneously.
   CAUTION: THE ROTOR OF C-76 IS CONNECTED TO +250 VOLTS.

L. TRANSMITTING I.F. NEUTRALIZING:

1. With microphone plugged into TR-4, turn VOX gain fully counter clockwise and turn XMTR GAIN fully clockwise. The FUNCTION switch should be left on SSB.
2. While talking into the microphone, increase RCVR GAIN until your speech can be heard from the speaker.
3. Adjust C-168 for minimum output from speaker.
4. If over one turn of adjustment is required, it will be necessary to realign T-14 and rebalance carrier, see paragraphs G and I.

IX AC-4 POWER SUPPLY

The R. L. DRAKE Model AC-4 is a complete power supply capable of supplying all of the required voltages for our TR-3 and TR-4 transceivers as well as our T-4 and T-4X transmitters with the proper filtering and regulation. The unit may be operated from 120 or 240 VAC, 50 or 60 cycles.

It is designed to fit into our MS-4 Matching Speaker or RV-4 Remote VFO to become a single unit.

To mount it in these units, slide it in from the rear so that the line cord and power cable face outward. Fasten it in place with the four studded rubber feet provided with the unit.

To connect, plug the female power connector on the end of the power cable into the male connector on the rear of the TR-3, TR-4, T-4 or T-4X. (See installation instructions for the appropriate equipment). A 6" lead terminated in a female phono plug extends from the power connector for connecting the MS-4 speaker when the unit is used with our TR-3 or TR-4 transceivers.

The bias adjustment should be set properly before any operation is attempted. (See tune up procedure).

IMPORTANT: Never ship the AC-4 mounted inside the Speaker or Remote VFO case or serious damage to the case will result.

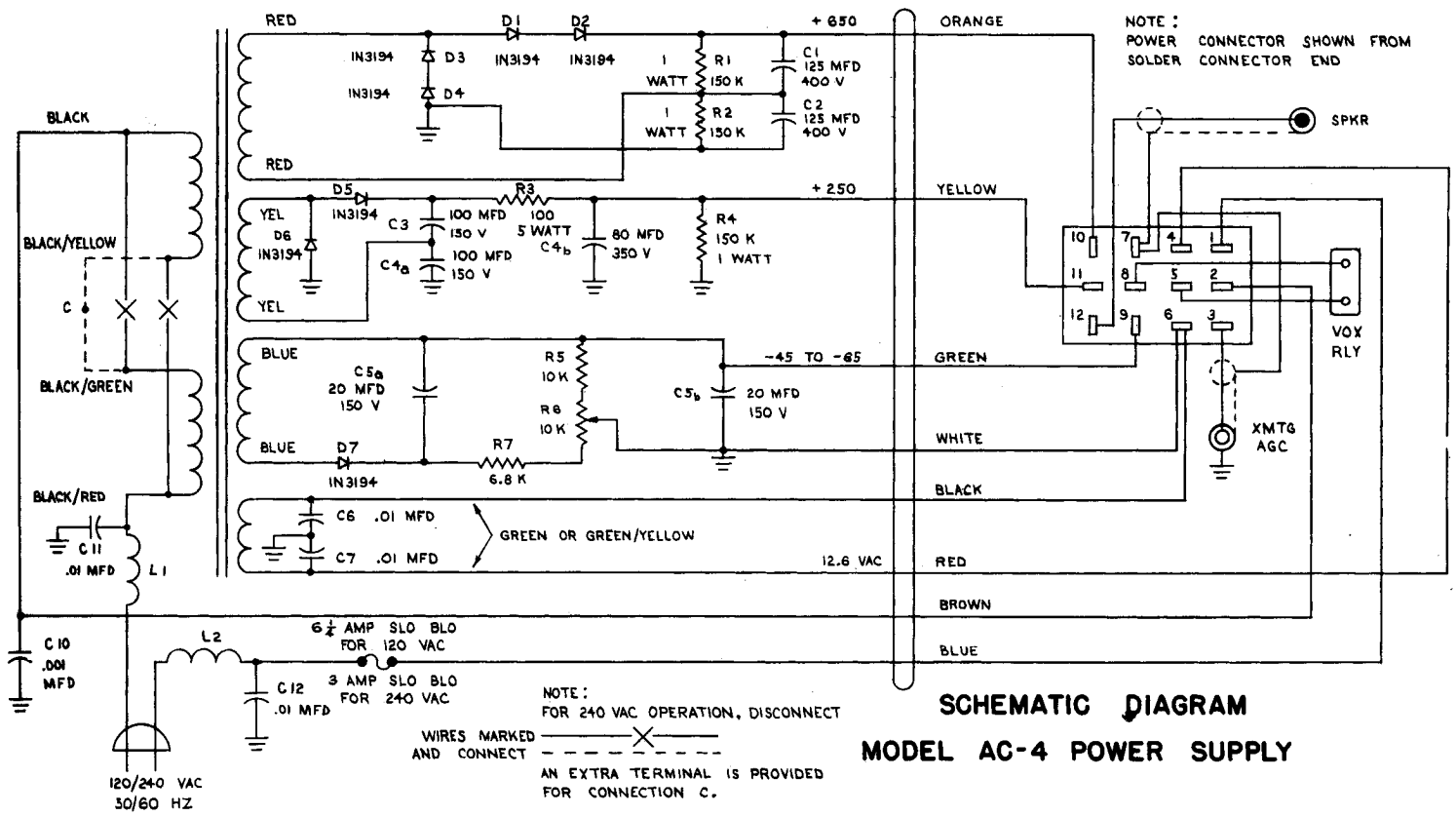

SCHEMATIC DIAGRAM

MODEL AC-4 POWER SUPPLY

X DC-3 POWER SUPPLY INSTRUCTIONS

The R. L. Drake model DC-3 power supply is a self contained power converter which transforms 12 VDC to the voltage necessary to operate our model TR-4.

The converter changes the DC input power to square wave A.C. and applies it to a transformer, T-1. The transformer output is rectified and filtered to provide 650 volts at 300 ma average, 500 ma peak, 250 volts at 175 ma, and -45 to -65 volts adjustable bias into a 33 K ohm load.

The DC-3 is supplied for use in cars with negative ground systems. Do not attempt to use it with positive ground systems or serious damage may result.

CAUTION: THE TRANSISTOR CASES ON THE BOTTOM OF THE POWER SUPPLY DO NOT OPERATE AT GROUND POTENTIAL. CARE SHOULD BE TAKEN THAT THESE TRANSISTORS DO NOT SHORT TO THE CAR FRAME OR DAMAGE TO THE POWER SUPPLY MAY RESULT.

We recommend that the DC-3 be mounted on the passenger side of the firewall. We do not recommend that it be placed in the trunk due to excessive primary lead length or in the engine compartment unless it is protected from water and engine heat.

To connect the DC-3, attach the short black wire of the cable assembly to the nearest convenient ground and run the red wire through the firewall to the ungrounded terminal of the battery, or to the "Hot" terminal of the starter solenoid. Mount the fuse holder as near the battery as possible in a convenient location. Attach the 10 conductor female connector to the DC-3.

The 12 conductor female connector is then mated to the male socket on the rear of the TR-4 and a speaker is attached to the phone plug on the end of the six inch lead protruding from this connector.

Coil up any excess power cable and tape it in a convenient location. You may need it when you trade cars. The large red and black battery wires should be cut as short as possible to avoid unnecessary voltage drop.

The BIAS ADJ, control, located on the end of the unit just above the cable entrance, should be adjusted as described in the TR-4 instructions under "TUNING PROCEDURE".

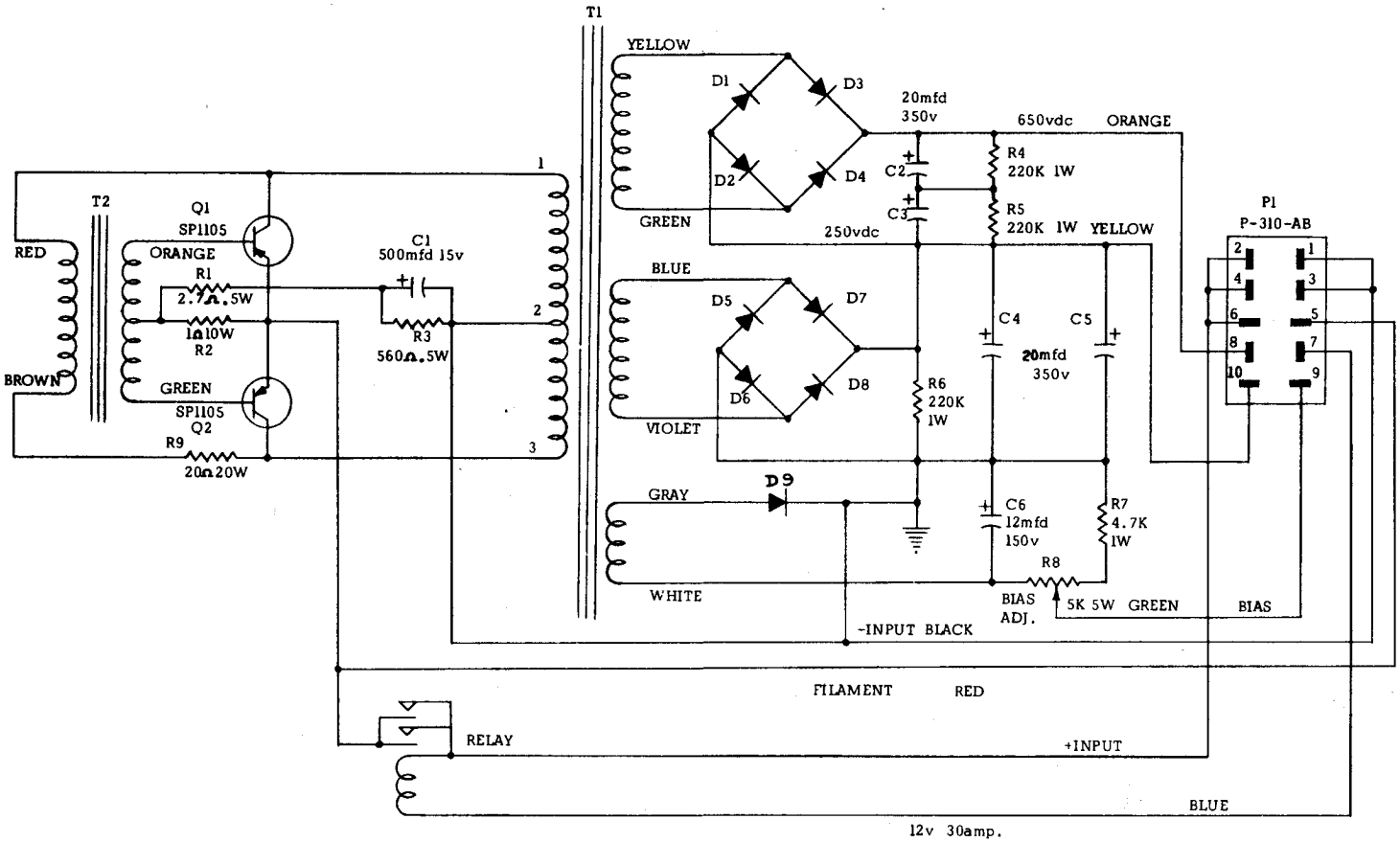

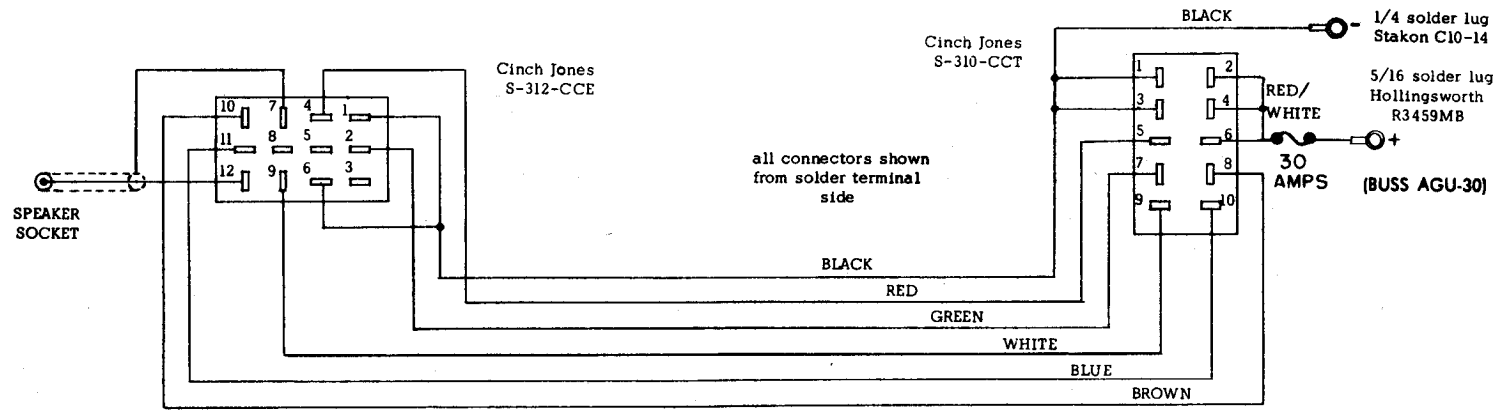

8 feet 6 conductor cable
Belden 3446

Fig. 16

SCHEMATIC DIAGRAM
MODEL DC-3 POWER SUPPLY

Note: If the old RV-3 is used with the TR-4, it must be modified as follows: Install a 22K, 2 watt resistor from Pin 1 of the OA2 to the terminal of the FUNCTION switch to which the Orange wire is attached.

The RV-4 is designed for use with the TR-3 or TR-4 transceiver to permit reception, transmission, or both transmission and reception on a frequency removed from the VFO setting of the transceiver, but in the same band to which the transceiver is tuned. The RV-4 consists of a highly stable permeability tuned VFO, now employing an FET in its solid state design, a cathode follower and associated control circuitry.

The unit is housed in an attractive cabinet which matches the transceiver and contains a 5-inch 4 ohm speaker. Our model AC-4 (or AC-3) power supply can also be housed in this cabinet. (See AC-4 instructions.) The dimensions are as follows: 5-3/8 inches high, 10-3/4 inches wide and 11-1/8 inches deep. Weight 6-1/2 lbs.

INSTALLATION:

To install the RV-4 with our TR-3, it will first be necessary to remove the bottom cover of the TR-3 and remove the jumper wire between pins 2 and 8 of the RV-3 jack (J2). Now replace the bottom cover of the TR-3 and connect the RV-4 cable to J2. Connect the speaker lead to the 6-inch lead protruding from the AC-3 or DC-3 (AC-4 or DC-4) power cable connector. This completes the installation.

If it is desired to disconnect the RV-4 from the TR-3, it will be necessary to replace the RV-4 cable connector with a jumper plug. This plug should consist of an 8 conductor male plug (Cinch Jones Type P-308 with either the CCE, FHE, FHT, or CCT metal caps - remove cable clamps) with a jumper wire connected between pins 2 and 8.

For use with the TR-4 it is necessary only to plug the RV-4 into the RV-4 plug J2 on the bottom of the TR-4 chassis. No jumper need be removed when the unit is installed nor is a jumper plug needed when it is disconnected.

NOTE: It is necessary to bond RV-4 chassis to transceiver chassis and to a good ground with a short piece of braid.

OPERATION:

The RV-4 has two controls: The main tuning and the RV-4 FUNCTION switch. The main tuning control determines the frequency of the VFO and is calibrated in exactly the same way as the transceiver VFO. The RV-4 FUNCTION control has four positions: OFF, RCV, RCV/XMIT, and XMIT.

In the OFF position, the unit draws B+ and filament current but does not provide any output. The transceiver will transceive normally.

In the RCV position, the RV-4 determines the receiving frequency and the transceiver VFO determines the transmitting frequency.

In the RCV/XMIT position, both transmit and receive frequencies are determined by the RV-4.

In the XMIT position, the RV-4 determines the transmitting frequency and transceiver VFO determines the receiving frequency.

The PTO indicator lamp is located directly above the main tuning knob. This lamp lights whenever the RV-4 is being used to control the frequency.

SERVICE DATA

We will check and factory align your RV-4 for a nominal fee of $5.00 plus transportation charges if the set has not been tampered with. If repairs are necessary, we will advise you of the cost before proceeding with the work. Units that have been tampered with or misaligned will be repaired on a time and material basis.

A. REMOVAL FROM CABINET:

1. If the AC-4 (or AC-3) power supply is installed in the RV-4 cabinet, it will first be necessary to remove it by removing the four screws holding it to the bottom of the RV-4 cabinet and sliding it out the rear.

2. Now loosen the six screws holding the RV-4 in the cabinet and slide it out the rear.

B. TUBE REPLACEMENT:

In general, most trouble encountered in radio equipment of good design is due to tube failure. The RV-4 has been designed so that tube replacement can be done without need for realignment. The best method of finding defective tubes is direct substitution. It is best not to rely too heavily on tube checkers.

C. TROUBLESHOOTING:

Careful consideration has been given in the design of the RV-4 to keep maintenance problems to a minimum. However, it is quite possible that some problem will arise which cannot be cured by tube substitution. If this occurs, we suggest that you either return your unit to your dealer or write direct to our service department describing your problem in detail. Include full information concerning external connections, control settings, tubes substituted etc. Do not return equipment to the factory without prior authorization.

The voltage and resistance charts and the schematic diagram should be valuable in isolating minor problems. However, no attempt should be made to service the RV-4 unless you are thoroughly familiar with electronic circuitry and servicing technique.

D. ALIGNMENT:

The RV-4 is very carefully aligned at our factory and should require no further adjustment. If a tracking error in the VFO is noted, the unit should be returned to our factory.

However, if the unit has the same calibration error from one end of the dial to the other, and if the error cannot be corrected by the movable index line, the dial scale can be slipped slightly on its shaft until the discrepancy is eliminated.

The only adjustment in the RV-4 which should require any readjustment is coil L2. This coil is mounted inside the small aluminum can on the RV-4 chassis. To adjust proceed as follows:

1. Switch the RV-4 function switch to RCV and tune its VFO to the 4.0 mc crystal calibrator signal (Transceiver function switch should be on CAL and BAND switch on 80.)

2. Tune L2 for maximum S meter reading. This completes the adjustment. Note that coil L3 has a value determined by the length of the cable connecting the RV-4 to the transceiver. Do not change the cable length or misalignment will result.

VOLTAGE CHART

Pin	1	2	3	4	5	6	7	8	9
V1	170	0	42	12.6*	0	170	0	4.2	6.3*

NOTE: These measurements were made from ground with an 11 megohm VTVM. The RV-4 was connected to the transceiver which was in the receive condition. The RV-4 FUNCTION switch was on the RCV/XMIT position. An * indicates AC voltage.

RESISTANCE CHART

Pin	1	2	3	4	5	6	7	8	9
V1	11K / 8K	33K	180	0	0	11K / 8K	33K	180	0

NOTE: These measurements were made from ground with the RV-4 connected to the transceiver but with the transceiver disconnected from the power supply. Where two resistances are shown, the top value was obtained with the RV-4 connected to the TR-3 and the bottom value was obtained with the unit connected to the TR-4. The RV-4 function switch was in the RCV/XMIT position.

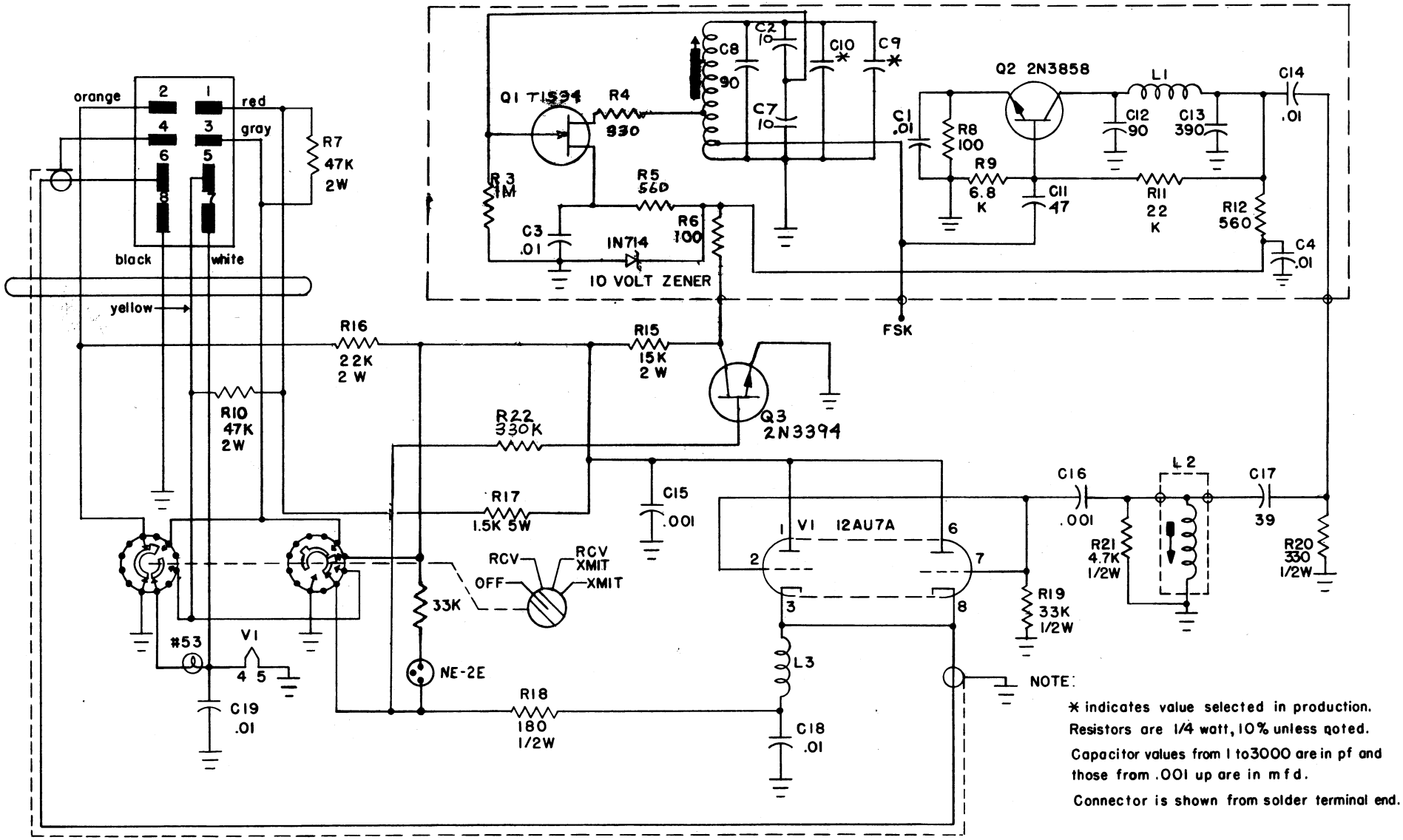

NOTE:

* indicates value selected in production.
Resistors are 1/4 watt, 10% unless noted.
Capacitor values from 1 to 3000 are in pf and those from .001 up are in mfd.
Connector is shown from solder terminal end.

SCHEMATIC DIAGRAM MODEL RV-4 REMOTE VFO

FF-1 FIXED FREQUENCY ADAPTER

DESCRIPTION

The Model FF-1 Fixed Frequency adapter is a solid state frequency determining unit. It provides crystal control of any two operating frequencies falling within the normal operating range of the TR-4 Transceiver. The FF-1 is well suited for net operation since it provides crystal controlled transmit frequency with VFO controlled receive frequency or crystal controlled transmit and receive frequency.

OPERATION

With the FF-1 in the "OFF" position the TR-4 functions normally. In the "T" position the transmit frequency is crystal controlled while the receive frequency is controlled by the VFO. In "T/R" position transmit and receive frequencies are crystal controlled. In all cases the red indicator lamp lights whenever the FF-1 is activated.

Two switch selected frequency channels are provided.

FF-1 MOUNTED UNDER TR-4

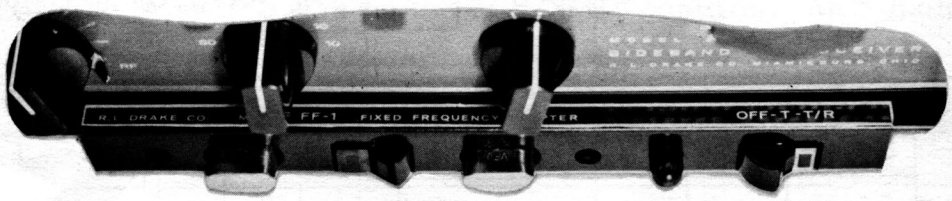

FIG.# 18

FF-1 FIXED FREQUENCY ADAPTER

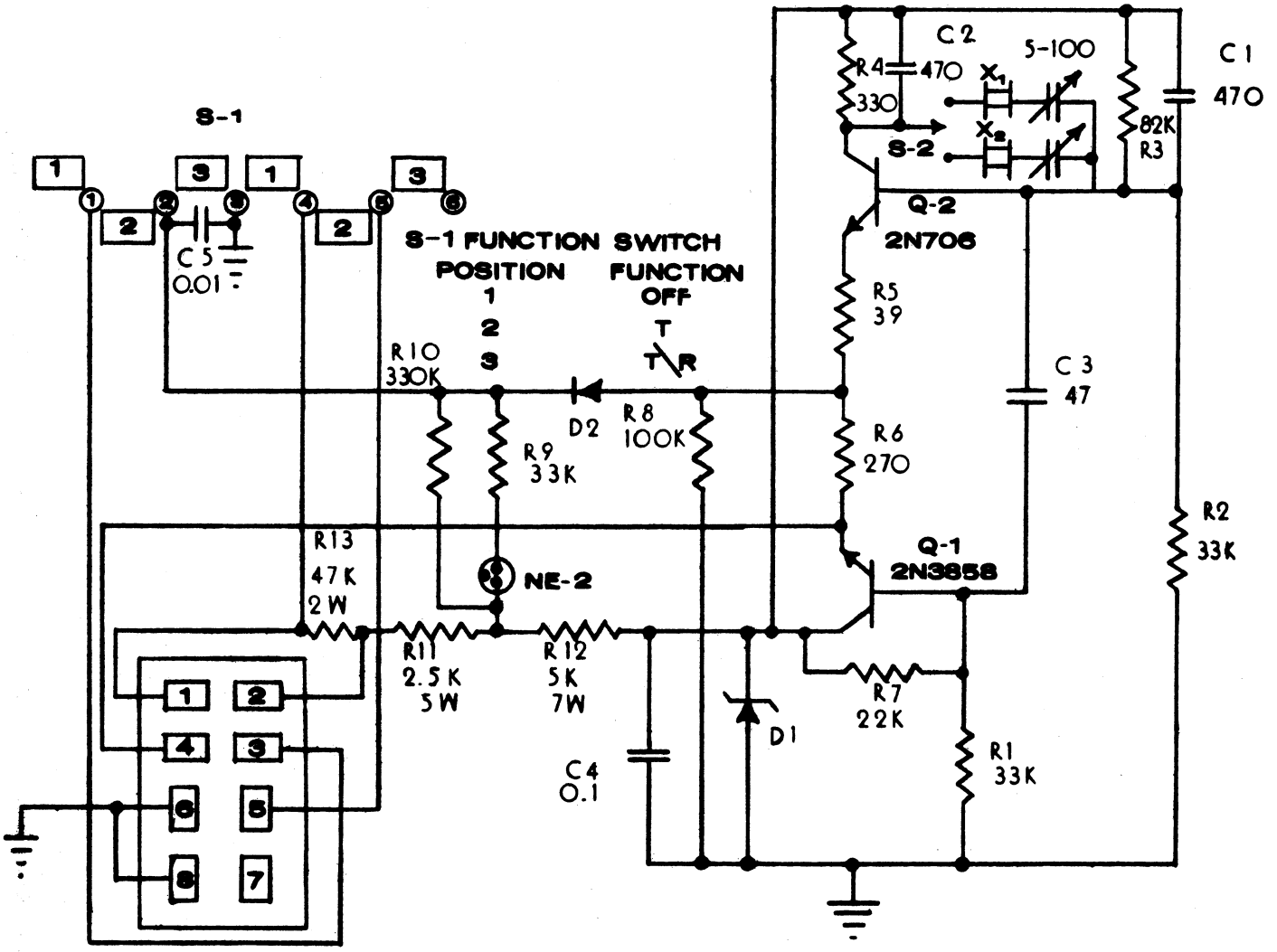

SCHEMATIC DIAGRAM
MODEL TR-4 TRANSCEIVER

466827500

BAND and FUNCTION switches viewed in counter clockwise position.
All resistors in VFO assembly T-5 are 1/4 watt.
All other resistors are 1/2 watt 10%, except where noted.
Capacitor values from 1 to 1000 are in pf and those from .001 are in mfd; unless otherwise noted.

J_2 and J_3 shown outside view.
Highest resistor R178
Highest capacitor C207
* value selected in production.
** Adjust to change VOX holding time.
*** Fil fuse is a 1 1/2" length of #26 tinned copper wire.